Pressure Independent Characterized Control Valves (PICCV)

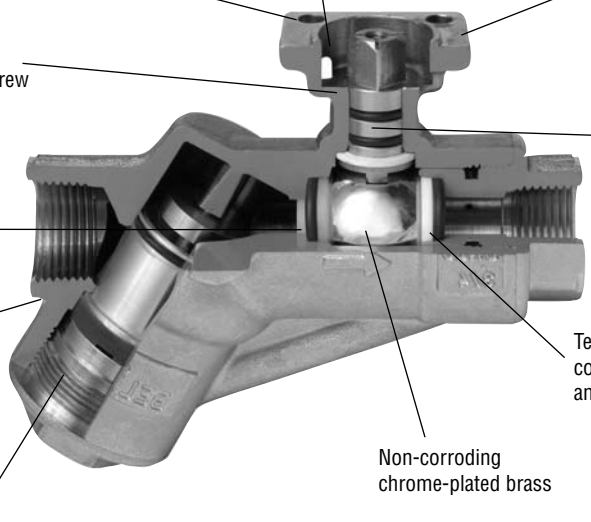

PATENTED

Disadvantages of Today's Systems

- Time consuming balancing effort
- Rebalancing required when adding to system or remodeling
- Poor valve authority at average or low load
- Balancing procedure dictates quality
- Potential spreading of control problems can occur when one or more loops are instable, due to interactive nature of circuits
- Low ΔT reduces efficiency of chillers, condensing boilers, or coils
- Starving of terminals in less favored spaces results in long start-up time

Advantages of the PICCV

- Easy selection, no C_v calculation required
- Hydronic balancing is simplified, as the circuits are not interactive
- Flexible commissioning
- One piece installation saves 50% of labor costs, installation space, and investment for balancing valve
- Reduces pumping costs
- Maintains ΔT for higher efficiency of chillers and condensing boilers
- Visualizes flow in a BMS system and provides accurate flow for each degree of opening
- Prevents overflow or underflow for fast start-up

Features

- Automatic dynamic system balancing
- Field adjustable flow rate
- 5 – 50 PSI differential pressure operating range (gradual flow will increase from 0-5 psi)
- 0.5 – 100 GPM (1/2" – 2")
- 5 year warranty

Options

- Belimo PC-Tool/ZTH-PICCV for commissioning
- Weather shields
- Auxiliary switches
- Metric threads

*Teflon® is a registered product of Dupont

M40019 - 06/10 - Subject to change. © Belimo Aircontrols (USA), Inc.

SET-UP

		2-WAY VALVE SPECIFY UPON ORDERING			
NON-SPRING RETURN Stays in Last Position	**LRB24-3** Floating type actuators	Power to pin 2 will drive valve CW. Power to pin 3 will drive valve CCW. The above will function when the directional switch is in the "1" position-to reverse select the "0" position.			
	LRX24-MFT **ARX24-MFT** MFT type actuators†	**NC:** Valve Closed-will open as voltage increases. Actuator switch on Y2.	**NO:** Valve Open-will close as voltage increases. Actuator switch on Y1.		
SPRING RETURN Note Fail Position	**TF24-MFT US** **LF24-MFT US** **AF24-MFT US** MFT type actuators†	**NC/FO Valve:** Valve Closed-will open as voltage increases. Actuator switch on CW. Spring Action: Will spring open upon power loss.	**NC/FC Valve:** Valve Closed-will open as voltage increases. Actuator switch on CW. Spring Action: Will spring closed upon power loss.	**NO/FC Valve:** Valve Open-will close as voltage increases. Actuator switch on CCW. Spring Action: Will spring closed upon power loss.	**NO/FO Valve:** Valve Open-will close as voltage increases. Actuator switch on CCW. Spring Action: Will spring open upon power loss.

† PICCVs with MFT actuators are dependent on their Minimum and Maximum Percentages of rotation.
Actuators must be re-programmed for different Minimum and Maximum Settings if actuator set-ups must be changed.
Please contact Technical Sales for information.

Installation

PICCVs shall be installed, with flow in the direction of the arrow on the valve body. If installed backwards, there could be damage to either the diaphragm or the regulator top.

The valve assembly can be installed in a vertical or horizontal arrangement, as long as the actuator is positioned to avoid condensation from dripping on the actuator.

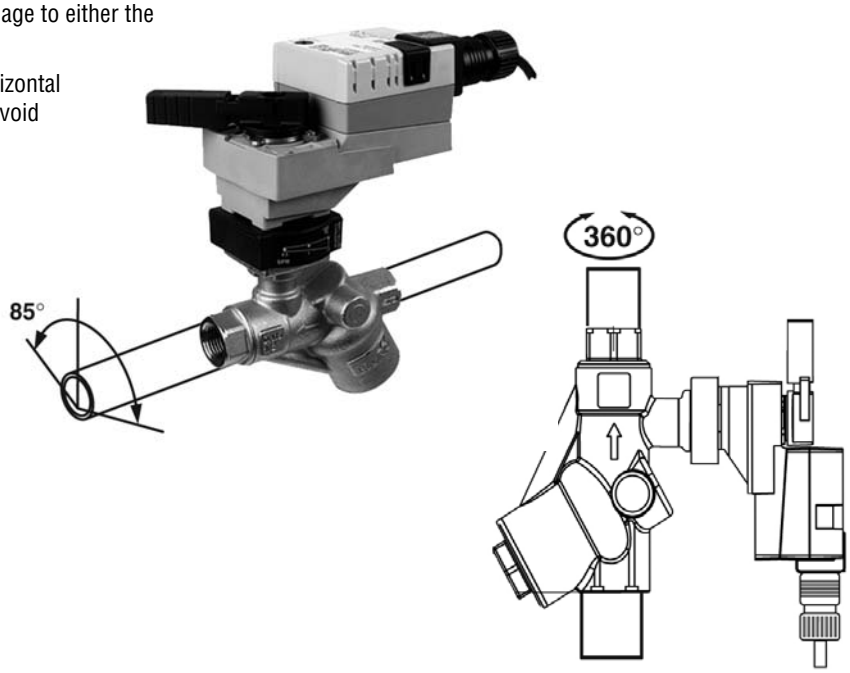

M40019 - 06/10 - Subject to change. © Belimo Aircontrols (USA), Inc.

Flow Pattern

PICCV consists of a differential pressure regulator in series with a control valve.

The amount of flow that passes through the valve is controlled by the use of a pressure regulator that moves according to the change in pressure above and below it.

All pressure changes are absorbed by the pressure regulator allowing the differential pressure to be held constant over the control valve section thereby giving the same flow.

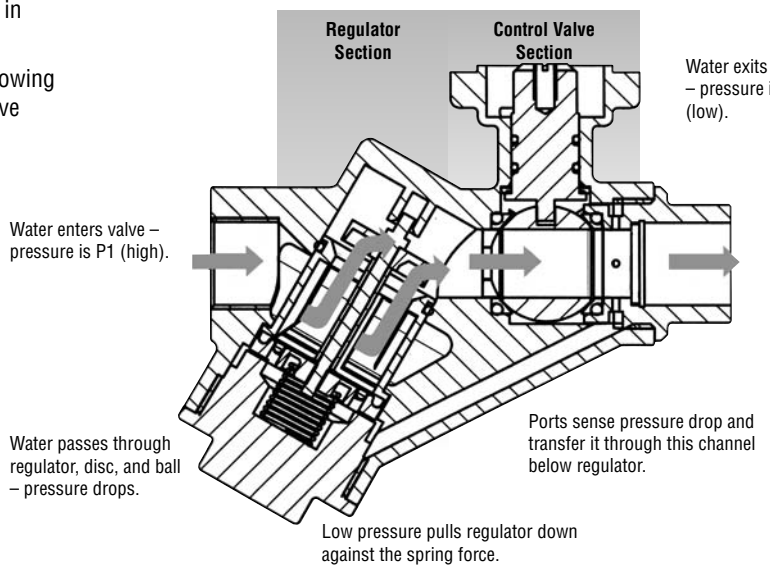

The Best Way to Control Flow

Maintain design flow independent of pressure variations.

The PICCV is a two-way valve that will supply a specific flow for each degree of ball opening regardless of pressure variations in a system.

Valve accuracy	± 10%	Combination of manufacturing tolerances and pressure variations

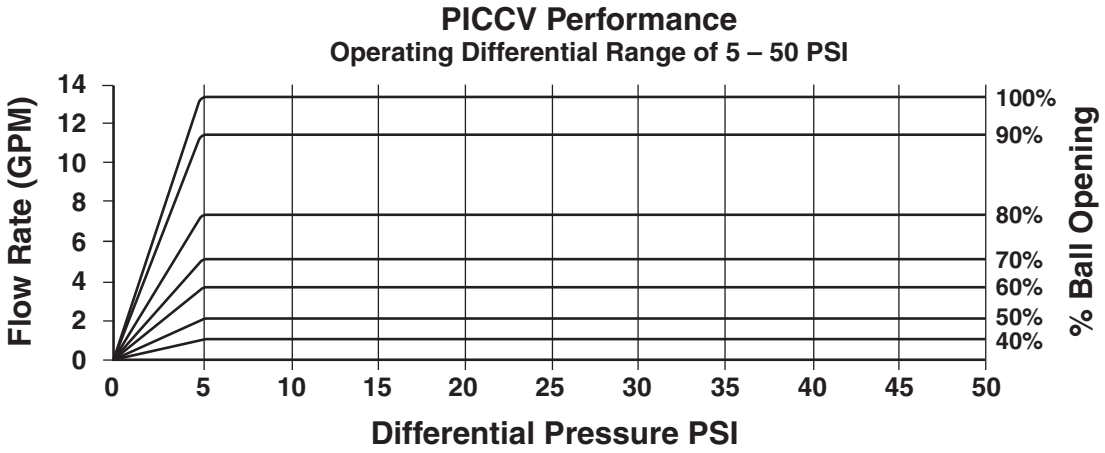

M40019 - 06/10 - Subject to change. © Belimo Aircontrols (USA), Inc.

Piping the PICCV to Achieve a Larger Flow Rate

The Pressure Independent Characterized Control Valves can be piped in a parallel orientation to achieve increased flow rates.

Our PICCV valves are available in flows to 100 GPM. To achieve flows larger than this, it is recommended to connect two of these valves in parallel leading to a common manifold. To correctly operate these valves, the Belimo Multi Function Technology (MFT) will be employed to utilize one common control signal.

For example, the first valve will be outfitted with an MFT actuator that will correspond to a 2-5 or 2.6 VDC signal. The second valve would be outfitted with an MFT actuator that would correspond to a 6-10 VDC signal. Therefore, through a single 2-10 VDC output, the full flow range will be achieved. The actuators will be wired in a parallel arrangement. The established configured P Codes are P-10137 for 2-5 VDC, P-10118 for 2-6 VDC, and P-10119 for 6-10 VDC.

This recommended application provides the control of flows up to 200 GPM by using two valves. The top diagram details valves piped in a parallel arrangement. The bottom diagram features a typical single piping arrangement.

If more than three valves are piped in parallel, please call Belimo to discuss control options.

TYPICAL PARALLEL PIPING IN RELATION TO THE INPUT AND OUTPUT (SCALE: NONE)

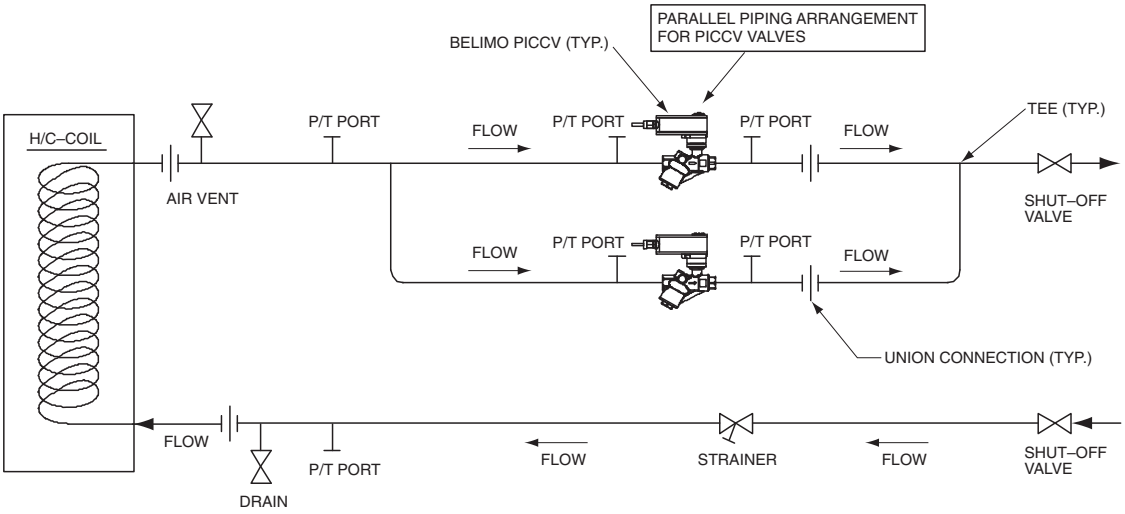

TYPICAL PIPING IN RELATION TO THE INPUT AND OUTPUT (SCALE: NONE)

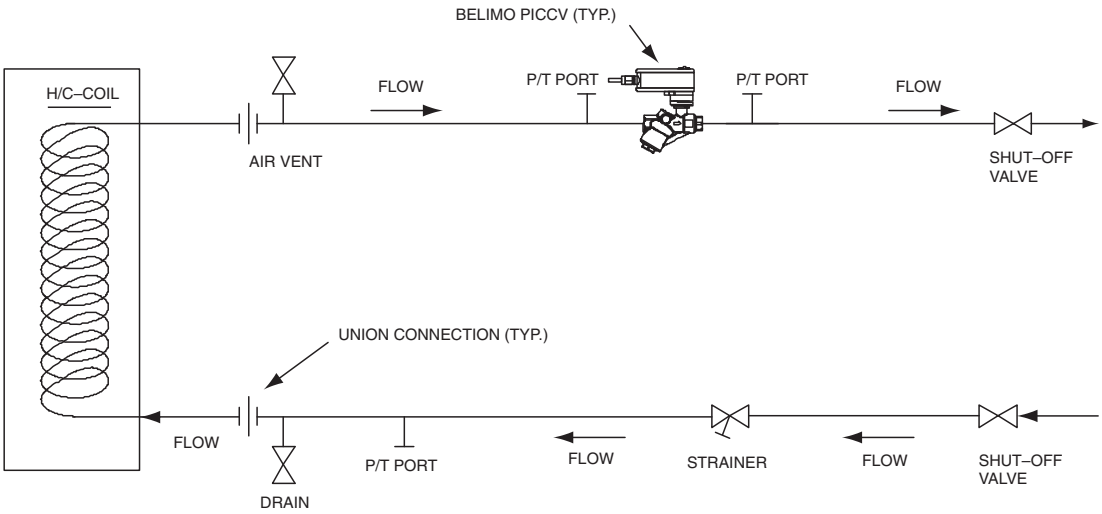

M40019 - 06/10 - Subject to change. © Belimo Aircontrols (USA), Inc.

Pressure Independent Characterized Control Valve™ (½" and ¾")

P	2	050	B	005	LRX	24	-MFT

Valve Type
P = Pressure Independent Characterized Control Valve

Porting
2 = Two Way

Valve Body Size
050 = ½"
075 = ¾"

Body Type
B = Chrome Plated

Flow Rate
005 = .50 GPM
010 = 1 GPM
015 = 1.5 GPM
020 = 2 GPM
025 = 2.5 GPM
030 = 3 GPM
035 = 3.5 GPM
040 = 4 GPM
045 = 4.5 GPM
050 = 5 GPM
055 = 5.5 GPM
060 = 6 GPM
065 = 6.5 GPM
070 = 7 GPM
075 = 7.5 GPM
080 = 8 GPM
085 = 8.5 GPM
090 = 9 GPM
095 = 9.5 GPM
100 = 10 GPM

Actuator Type
Non-Spring Return
LRB…
LRX…
Spring Return
TF…
LF…

Power Supply
24 = 24 VAC/DC
120 = 120 VAC

Control
-3 = Floating Point
-MFT = Multi-Function Technology

ORDERING EXAMPLE

1 Choose the valve actuator combination.

P2050B005+LRX24-MFT

2 Specify preference or configuration.

3 **For MFT orders only - select programming code**

+NC **+ Tagging (if needed)**

4 Does order require tagging?

Set-Up

Non-Spring Models
NO = Normally Open
NC = Normally Closed

Spring Return Models
NO/FO = Normally Open/Fail Open
NO/FC = Normally Open/Fail Closed

NC/FO = Normally Closed/Fail Open
NC/FC = Normally Closed/Fail Closed

Refers to valve ports from inlet to outlet, per flow arrow.

P-10019 (A19)

P-10019 (A19)	2 to 10 VDC
P-10028 (A28)	0 to 10 VDC
P-20031 (W31)	0.02 to 5.00 seconds PWM
P-20032 (W32)	0.10 to 25.50 seconds PWM
P-20034 (W34)	0.59 to 2.93 seconds PWM
P-30003 (F03)	Floating Point
P-10019 (A19)	On/Off**

Tagging:
Valves may be tagged per customer specification. ($10.00 charge per tag)

Example:
AHU-1
FCU-2

Part number for tagging:
99981-00101

5 Complete Ordering Example: P2050B005+LRX24-MFT+NC+A19

** Wire for On/Off

M40019 - 06/10 - Subject to change. © Belimo Aircontrols (USA), Inc.

Pressure Independent Characterized Control Valve™ Nomenclature

PICCV	25	-012	+LRX	24	-MFT	
Pressure Independent Characterized Control Valve 2-way Chrome Plated Brass Ball and Brass Stem	**Valve Size** 25 = 1” 32 = 1¼” 40 = 1½” 50 = 2”	**Flow Rate** 3 GPM Refer to table	**Actuator Type** Non-Spring Return LRB… LRX… ARX… Spring Return TF… LF… AF…	**Power Supply** 24 = 24 VAC/DC 120 = 120 VAC	**Control** -3 = Floating Point -MFT = Multi-Function Technology	S = Built-in Auxiliary Switch

Ordering Example

1 Choose the valve actuator combination.

PICCV-25-012+LRX24-MFT

2 Specify preference or configuration.

3 **For MFT orders only - select programming code**

+NC | +Tagging (if needed)

4 Does order require tagging?

Set-Up

Non-Spring Models
NO = Normally Open
NC = Normally Closed

Spring Return Models
NO/FO = Normally Open/Fail Open
NO/FC = Normally Open/Fail Closed

NC/FO = Normally Closed/Fail Open
NC/FC = Normally Closed/Fail Closed

Refers to valve ports from inlet to outlet, per flow arrow.

P-10019 (A19)

P-10019 (A19)	2 to 10 VDC
P-10028 (A28)	0 to 10 VDC
P-20031 (W31)	0.02 to 5.00 seconds PWM
P-20032 (W32)	0.10 to 25.50 seconds PWM
P-20034 (W34)	0.59 to 2.93 seconds PWM
P-30003 (F03)	Floating Point
P-10019 (A19)	On/Off**

Tagging:
Valves may be tagged per customer specification. ($10.00 charge per tag)

Example:
AHU-1
FCU-2

Part number for tagging:
99981-00101

5 Complete Ordering Example: PICCV-25-012+LRX24-MFT+NC+A19

** Wire for On/Off

M40019 - 06/10 - Subject to change. © Belimo Aircontrols (USA), Inc.

Pressure Independent Characterized Control Valves™ (PICCV)
Product Range Overview – P2..., 2-way

	Valve Nominal Size		Type	Suitable Actuators					
GPM**	Inches	DN [mm]	2-way NPT	Spring Return			Non-Spring Return		
0.5	½	15	P2050B005	TF24-MFT US	LF24-MFT US		LRB24-3	LRX24-MFT	LRCB24-3 Heat Pump Only
1	½	15	P2050B010						
1.5	½	15	P2050B015						
2	½	15	P2050B020						
3	½	15	P2050B030						
4	½	15	P2050B040						
5	½	15	P2050B050						
6	¾	20	P2075B060						
7	¾	20	P2075B070						
8	¾	20	P2075B080						
9	¾	20	P2075B090						
10	¾	20	P2075B100						
12	1	25	PICCV-25-012						
14	1	25	PICCV-25-014						
16	1	25	PICCV-25-016						
18	1	25	PICCV-25-018						
18	1¼	32	PICCV-32-018			AF24-MFT US		ARX24-MFT	
20	1¼	32	PICCV-32-020						
22	1¼	32	PICCV-32-022						
24	1¼	32	PICCV-32-024						
26	1¼	32	PICCV-32-026						
26	1½	40	PICCV-40-026						
28	1½	40	PICCV-40-028						
30	1½	40	PICCV-40-030						
33	1½	40	PICCV-40-033						
33	2	50	PICCV-50-033						
36	2	50	PICCV-50-036						
40	2	50	PICCV-50-040						
44	2	50	PICCV-50-044						
48	2	50	PICCV-50-048						
52	2	50	PICCV-50-052						
56	2	50	PICCV-50-056						
60	2	50	PICCV-50-060						
65	2	50	PICCV-50-065						
70	2	50	PICCV-50-070						
75	2	50	PICCV-50-075						
80	2	50	PICCV-50-080						
90	2	50	PICCV-50-090						
100	2	50	PICCV-50-100						

**Reference pages 8 and 9 for all flow rates available.

Equal percentage characteristic

PICCV

Applications
Water-side control of heating and cooling systems, for AHUs, re-heat coils, fan coil units, unit ventilators and heat pumps.

Mode of Operation
The Pressure Independent Characterized Control Valve is a two-way valve which combines the functionality of a control valve and a pressure regulating valve, creating one precise product which is unaffected by pressure variations in a system.

Product Features
Constant flow regardless of pressure variations in the system at every degree of ball opening. Maximizes chiller ΔT, preventing energizing additional chillers due to low ΔT. Simplified valve sizing and selection, no C_V calculations required.

Actuator Specifications

Control type	Floating Point, Non-Spring Multi-Function Technology (MFT) Non-Spring and Spring Return
Manual override	LRB, LRX, LRC, AF, ARX
Electrical connection	3 ft [1m] cable with ½" conduit fitting (additional cable lengths are available)

Valve Specifications

Service	chilled or hot water, 60% glycol
Flow characteristic	equal percentage
Controllable flow range	75°
Sizes	½", ¾", 1", 1¼", 1½", 2"
Type of end fitting	NPT female ends
Materials	
Body	forged brass, nickel plated
Ball	chrome plated brass
Stem	chrome plated brass
Seat	fiberglass reinforced Teflon® PTFE
Set O-ring	Viton®
Characterizing disc	½" & ¾" brass 1"- 2" TEFZEL®
Packing	2 EPDM O-rings, lubricated
Diaphragm	½" & ¾" silicone and Nomex 1"- 2" polyester reinforced silicone
Regulator components	stainless steel/brass/Delrin 500AF
Spring	stainless steel
Pressure rating	
600 psi	½", ¾", 1"
400 psi	1¼", 1½", 2"
Media temp range	0°F to 212°F [-18°C to 100°C]
Close off pressure	200 psi
Maximum differential pressure across valve (range)	5 to 50 psid
Leakage	ANSI Class IV (0.01% of rated valve capacity at 50 psi differential)

Tefzel® is a registered trademark of DuPont

M40019 - 06/10 - Subject to change. © Belimo Aircontrols (USA), Inc.

P2... Series Pressure Independent Characterized Control Valves™ (PICCV)
Chrome Plated Brass Ball and Brass Stem, NPT Female Ends

Application

The Pressure Independent Characterized Control Valve is typically used in air handling units on heating and cooling coils, and fan coil unit heating or cooling coils. Some other common applications include unit ventilators and VAV re-heat coils. This valve is suitable for use in a hydronic system with constant or variable flow.

This valve is designed with MFT functionality which facilitates the use of various control input.

Technical Data	
Service	chilled or hot water, 60% glycol
Flow characteristic	equal percentage
Size	½", ¾", 1"
Type of end fitting	female, NPT
Materials	
Body	forged brass, nickel plated
Ball	chrome plated brass
Stem	chrome plated brass
Seat O-rings	Viton
Seat	fiberglass reinforced Teflon® PTFE
Characterizing disc	½" & ¾" Brass 1" TEFZEL®
Packing	2 EPDM O-rings, lubricated
Diaphragm	½" & ¾" silicone and Nomex 1" polyester reinforced silicone
Regulator components	stainless steel/brass/Delrin 500 AF
Spring	stainless steel
Body pressure rating	600 PSI
Media temp. range	0°F to 212°F [-18°C to 100°C]
Close off pressure	200 PSI
Leakage	ANSI Class IV (0.01% of rated valve capacity at 50 psi differential)
Flow rate	
½"	0.5 GPM [.03 l/s], 1 GPM [.06 l/s], 1.50 GPM [0.09 l/s], 2 GPM [.13 l/s], 2.5 GPM (0.16 l/s) , 3 GPM [.19 l/s], 3.5 GPM(0.22 l/s), 4 GPM [.25 l/s], 4.5 GPM (0.28 l/s), 5 GPM [.32 l/s], 5.5 GPM (0.35 l/s)
¾"	6 GPM [0.37 l/s], 6.5 GPM (0.41 l/s), 7 GPM [0.44 l/s], 7.5 GPM (0.47 l/s) 8 GPM [0.50 l/s], 8.5 GPM (0.54 l/s), 9 GPM [0.57 l/s], 9.5 GPM (0.60 l/s) 10 GPM [0.63 l/s]
1"	11 GPM (0.69 l/s), 12 GPM [0.76 l/s], 13 GPM (0.82), 14 GPM [0.88 l/s], 15 GPM (0.95 l/s), 16 GPM [1.01 l/s], 17 GPM (1.07 l/s), 18 GPM [1.14 l/s] 19 GPM (1.20 l/s)
Rangeability	100 : 1
Differential pressure	5 to 50 PSI operating range
Valve accuracy	± 10% combination of manufacturing tolerances and pressure variations
Weight of valve body	½" = 2.52 lbs ¾" = 2.52 lbs 1" = 4.98 lbs

½" body has two different flow capacities (.50 GPM to 2.5 GPM) (3 GPM to 5.5 GPM)
1" body has two different flow capacities (11 GPM to 16 GPM) (17 GPM to 19 GPM)
Tefzel® and Teflon® are registered trademarks of Dupont

	Flow Rate		Valve Nominal Size			Suitable Actuators				
Valve Model	GPM	Liter/sec	Inches	DN mm	Close-off PSI	Spring Return		Non-Spring Return		
P2050B005	0.5	0.03	½	15	200	TF24-MFT US	LF24-MFT US	LRB(X)24-3	LRX24-MFT	LRCB24-3 Heat Pump Only
P2050B010	1	0.06	½	15	200					
P2050B015	1.5	0.09	½	15	200					
P2050B020	2	0.13	½	15	200					
P2050B025	2.5	0.16	½	15	200					
P2050B030	3	0.19	½	15	200					
P2050B035	3.5	0.22	½	15	200					
P2050B040	4	0.25	½	15	200					
P2050B045	4.5	0.28	½	15	200					
P2050B050	5	0.32	½	15	200					
P2050B055	5.5	0.35	½	15	200					
P2075B060	6	0.38	¾	20	200					
P2075B065	6.5	0.41	¾	20	200					
P2075B070	7	0.44	¾	20	200					
P2075B075	7.5	0.47	¾	20	200					
P2075B080	8	0.50	¾	20	200					
P2075B085	8.5	0.54	¾	20	200					
P2075B090	9	0.57	¾	20	200					
P2075B095	9.5	0.60	¾	20	200					
P2075B100	10	0.63	¾	20	200					
PICCV-25-011	11	0.69	1	25	200					
PICCV-25-012	12	0.76	1	25	200					
PICCV-25-013	13	0.82	1	25	200					
PICCV-25-014	14	0.88	1	25	200					
PICCV-25-015	15	0.95	1	25	200					
PICCV-25-016	16	1.01	1	25	200					
PICCV-25-017	17	1.07	1	25	200					
PICCV-25-018	18	1.14	1	25	200					
PICCV-25-019	19	1.20	1	25	200					

M40019 - 06/10 - Subject to change. © Belimo Aircontrols (USA), Inc.

P2... Series Pressure Independent Characterized Control Valves™ (PICCV)
Chrome Plated Brass Ball and Brass Stem, NPT Female Ends

Application

The Pressure Independent Characterized Control Valve is typically used in air handling units on heating and cooling coils, and fan coil unit heating or cooling coils. Some other common applications include unit ventilators and VAV re-heat coils. This valve is suitable for use in a hydronic system with constant or variable flow.

This valve is designed with MFT functionality which facilitates the use of various control input.

Technical Data	
Service	chilled or hot water, 60% glycol
Flow characteristic	equal percentage
Size	1¼", 1½", 2"
Type of end fitting	female, NPT
Materials	
Body	forged brass, nickel plated
Ball	chrome plated brass
Stem	chrome plated brass
Seat O-rings	Viton
Seat	fiberglass reinforced Teflon® PTFE
Characterizing disc	TEFZEL®
Packing	2 EPDM O-rings, lubricated
Diaphragm	polyester reinforced silicone
Regulator components	stainless steel/brass/Delrin 500 AF
Spring	stainless steel
Body pressure rating	400 PSI
Media temp. range	0°F to 212°F [-18°C to 100°C]
Close-off pressure	200 PSI
Leakage	ANSI Class IV (0.01% of rated valve capacity at 50 psi differential)
Flow rate	
1¼"	18 GPM [1.14 l/s], 19 GPM (1.2 l/s), 20 GPM [1.26 l/s], 21 GPM (1.32 l/s) 22 GPM [1.33 l/s], 23 GPM (1.45 l/s), 24 GPM [1.51 l/s], 25 GPM (1.58 l/s) 26 GPM [1.64 l/s]
1½"	26 GPM [1.64 l/s], 27 GPM (1.7 l/s), 28 GPM [1.77 l/s], 29 GPM (1.83 l/s) 30 GPM [1.89 l/s], 31 GPM (1.96 l/s), 32 GPM (2.01 l/s), 33 GPM [2.08 l/s]
2" small	33 GPM [2.08 l/s], 34 GPM (2.15 l/s), 35 GPM (2.21 l/s), 36 GPM [2.27 l/s], 37 GPM (2.33 l/s), 38 GPM (2.40 l/s), 39 GPM (2.56 l/s), 40 GPM [2.52 l/s]
2" large	44 GPM [2.78 l/s], 48 GPM [3.03 l/s], 52 GPM [3.28 l/s], 56 GPM [3.53 l/s], 60 GPM [3.79 l/s], 65 GPM [4.10 l/s], 70 GPM [4.42 l/s], 75 GPM [4.73 l/s], 80 GPM [5.05 l/s], 90 GPM [5.68 l/s], 100 GPM [6.31 l/s]
Rangeability	100 : 1
Differential pressure	5 to 50 PSI operating range
Valve accuracy	± 10% combination of manufacturing tolerances and pressure variations
Weight of valve body	1¼" = 8.31 lbs 1½" = 7.70 lbs 2" = 9.38 lbs 2" large = 29.10 lbs

2" body has two different flow capacities (44 GPM to 80 GPM) (90 GPM & 100 GPM)
Tefzel® and Teflon® are registered trademarks of Dupont

	Flow Rate		Valve Nominal Size			Suitable Actuators	
Valve Model	GPM	Liter/sec	Inches	DN mm	Close-off PSI	Spring Return	Non-Spring Return
PICCV-32-018	18	1.14	1¼	32	200	AF24-MFT US	ARX24-MFT
PICCV-32-019	19	1.20	1¼	32	200		
PICCV-32-020	20	1.26	1¼	32	200		
PICCV-32-021	21	1.32	1¼	32	200		
PICCV-32-022	22	1.39	1¼	32	200		
PICCV-32-023	23	1.45	1¼	32	200		
PICCV-32-024	24	1.51	1¼	32	200		
PICCV-32-025	25	1.58	1¼	32	200		
PICCV-32-026	26	1.64	1¼	32	200		
PICCV-40-026	26	1.64	1½	40	200		
PICCV-40-027	27	1.70	1½	40	200		
PICCV-40-028	28	1.77	1½	40	200		
PICCV-40-029	29	1.83	1½	40	200		
PICCV-40-030	30	1.89	1½	40	200		
PICCV-40-031	31	1.96	1½	40	200		
PICCV-40-032	32	2.01	1½	40	200		
PICCV-40-033	33	2.08	1½	40	200		
PICCV-50-033	33	2.08	2	50	200		
PICCV-50-034	34	2.15	2	50	200		
PICCV-50-035	35	2.21	2	50	200		
PICCV-50-036	36	2.27	2	50	200		
PICCV-50-037	37	2.33	2	50	200		
PICCV-50-038	38	2.40	2	50	200		
PICCV-50-039	39	2.46	2	50	200		
PICCV-50-040	40	2.52	2	50	200		
PICCV-50-044	44	2.78	2	50	200		
PICCV-50-048	48	3.03	2	50	200		
PICCV-50-052	52	3.28	2	50	200		
PICCV-50-056	56	3.53	2	50	200		
PICCV-50-060	60	3.79	2	50	200		
PICCV-50-065	65	4.10	2	50	200		
PICCV-50-070	70	4.42	2	50	200		
PICCV-50-075	75	4.73	2	50	200		
PICCV-50-080	80	5.05	2	50	200		
PICCV-50-090	90	5.68	2	50	200		
PICCV-50-100	100	6.31	2	50	200		

M40019 - 06/10 - Subject to change. © Belimo Aircontrols (USA), Inc.

M40019 - 06/10 - Subject to change. © Belimo Aircontrols (USA), Inc.

This Page Intentionally Left Blank

Optimize Your Heat Pump Application

by Using a Pressure Independent Characterized Control Valve

What are the benefits?

A balanced system is achieved without the need for a balancer to manually balance each circuit. Because the system is dynamic and the PICCV performs dynamic balancing, Differential Pressures are no longer an issue to be concerned with. The PICCV will maintain a constant flow at part load and during morning warm-up when all loops become critical. With the PICCV, each terminal gets the required flow, no over-flow or under-flow at this critical time. The PICCV allows a mechanic to easily commission additional circuits after the initial system is up and running, again thanks to dynamic balancing capability. The PICCV is available in flow rates from .5 to 80 GPM. Choosing the right PICCV is as easy as determining the appropriate flow for your heat pump and then choosing the valve that satisfies the flow requirement.

How does it work?

Keep with the same idea of a conventional heat pump system, then add the Belimo PICCV (2-way Pressure Independent Characterized Control Valve). Think savings, and not necessarily first cost of equipment. Add a VFD (with its known and accepted benefits) and a Belimo PICCV as your flow control valve, and you have now optimized your system flow for very little additional cost.

HEAT PUMP IN HEATING MODE

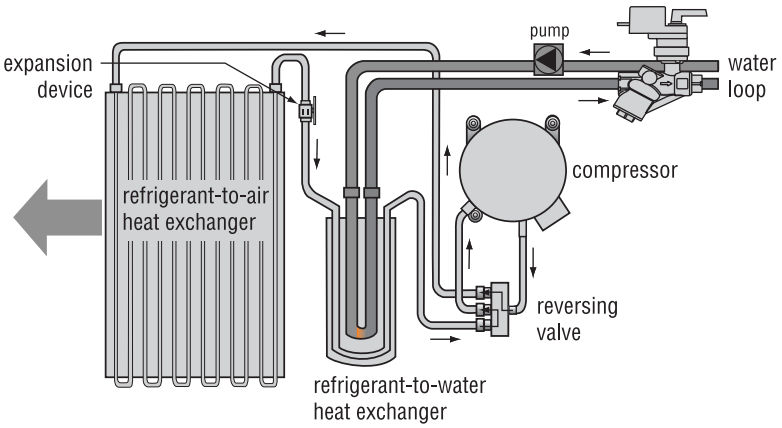

HEAT PUMP IN COOLING MODE

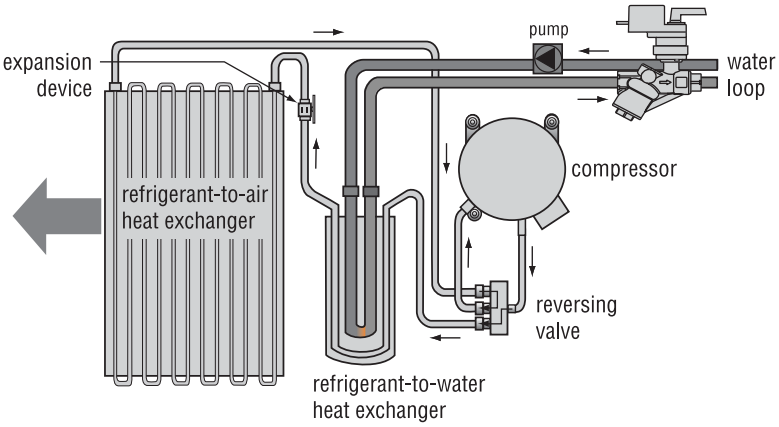

M40019 - 06/10 - Subject to change. © Belimo Aircontrols (USA), Inc.

Instructions for Non-Spring Actuator Utilizing the FlowSetR™

NON-SPRING RETURN ACTUATOR: LRB24-3

DEFAULT SET-UP:

FlowSetR™
The factory setting corresponds to the ordered flow rate (selected from Belimo's standard product range). The valves factory setting is in open position (valve always closes in CW direction).

To set or adjust desired maximum flow (actuator, FlowSetR™ and valve are connected):

1. Fully close the valve via actuator control signal or via manual override (press button and turn handle in clockwise direction).

   NOTE: The FlowSetR™ fixed clockwise end stop purposely prevents the actuator from returning to its full zero-degree position, eliminating excess rotation.

2. Use the integrated hex tool in the actuator lever to turn adjustment screw in plus (+) or minus (-) direction in order to move scale indicator to desired flow rate. A standard hex tool (i.e. Allen wrench) size 5/32" or 4mm can also be used to turn adjustment screw.

PICCV flow can be field adjusted by using a hex tool. Therefore, the maximum flow can be increased or decreased within the valves adjustable flow range.

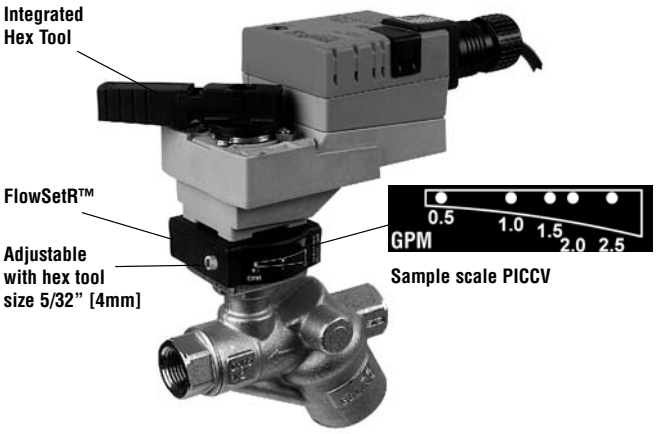

On Floating Point actuators, the running time is constant but dependent on the overall angle of rotation.

Avoid disconnecting FlowSetR™ from actuator or valve! If necessary, refer to instruction sheet on how to install FlowSetR™ to valve, and actuator to FlowSetR™.

Valve Sizing and Selection

PRESSURE INDEPENDENT, ON/OFF, PROPORTIONAL, FLOATING ACTUATOR

REQUIRED INFORMATION

FOR SIZING:
flow in GPM

FOR SELECTION:
2-way valves only
pipe size
media temperature
spring return or non-spring return
required close-off pressure (COP)
voltage requirement
ambient temperature
required accessories

EQUATIONS USED

No equations are required. Choose the PICCV that has the closest GPM to the requirement and round up to next available flow.

PROCEDURE

1) Obtain required GPM
2) Choose valve model number that has closest GPM rating (round up)
3) Verify that valve size is not larger than pipe size and in general, do not select a valve less than ½ of the line size
4) Select actuator based upon selection parameters above
5) Based upon actuator/valve selection, verify close-off pressure (COP) meets project requirements

EXAMPLE OF CV CALCULATION

87 GPM is needed – choose 90 GPM valve PICCV-50-090

M40019 - 06/10 - Subject to change. © Belimo Aircontrols (USA), Inc.

PICCV Running Times

All MFT actuators have constant running time of 100 seconds. Whether they are set for on/off, floating or proportional control, the running time remains constant.

Note for Floating Point Control with LR...-3: These actuators have a constant running time. The running time is dependent on the model number or FlowSetR™ position as indicated in the table below. Some DDC controllers need an adjustment of the running time, otherwise they lose the position information. In any case, we recommend a position reset once a day.

		Running Time (sec.)	
Valve	**Flow Rate (GPM)**	**LRB24-3/LRX120-3**	**LRX24-MFT, ARX24-MFT TF24-MFT US, LF24-MFT US, AF24-MFT US**
P2050B005	0.5	45	100
P2050B010	1	61	100
P2050B015	1.5	73	100
P2050B020	2	79	100
P2050B025	2.5	84	100
P2050B030	3	75	100
P2050B035	3.5	77	100
P2050B040	4	79	100
P2050B045	4.5	81	100
P2050B050	5	83	100
P2050B055	5.5	87	100
P2075B060	6	55	100
P2075B065	6.5	57	100
P2075B070	7	59	100
P2075B075	7.5	61	100
P2075B080	8	63	100
P2075B085	8.5	65	100
P2075B090	9	69	100
P2075B095	9.5	71	100
P2075B100	10	81	100
PICCV-25-011	11	60	100
PICCV-25-012	12	62	100
PICCV-25-013	13	64	100
PICCV-25-014	14	67	100
PICCV-25-015	15	69	100
PICCV-25-016	16	86	100
PICCV-25-017	17	65	100
PICCV-25-018	18	67	100
PICCV-25-019	19	78	100
PICCV-32-018	18	N/A	100
PICCV-32-019	19	N/A	100
PICCV-32-020	20	N/A	100
PICCV-32-021	21	N/A	100
PICCV-32-022	22	N/A	100
PICCV-32-023	23	N/A	100
PICCV-32-024	24	N/A	100
PICCV-32-025	25	N/A	100
PICCV-32-026	26	N/A	100

M40019 - 06/10 - Subject to change. © Belimo Aircontrols (USA), Inc.

PICCV Running Times

		Running Time (sec.)	
Valve	**Flow Rate (GPM)**	**LRB24-3**	**LRX24-MFT, ARX24-MFT TF24-MFT US, LF24-MFT US, AF24-MFT US**
PICCV-40-026	26	N/A	100
PICCV-40-027	27	N/A	100
PICCV-40-028	28	N/A	100
PICCV-40-029	29	N/A	100
PICCV-40-030	30	N/A	100
PICCV-40-031	31	N/A	100
PICCV-40-032	32	N/A	100
PICCV-40-033	33	N/A	100
PICCV-50-033	33	N/A	100
PICCV-50-034	34	N/A	100
PICCV-50-035	35	N/A	100
PICCV-50-036	36	N/A	100
PICCV-50-037	37	N/A	100
PICCV-50-038	38	N/A	100
PICCV-50-039	39	N/A	100
PICCV-50-040	40	N/A	100
PICCV-50-044	44	N/A	100
PICCV-50-048	48	N/A	100
PICCV-50-052	52	N/A	100
PICCV-50-056	56	N/A	100
PICCV-50-060	60	N/A	100
PICCV-50-065	65	N/A	100
PICCV-50-070	70	N/A	100
PICCV-50-075	75	N/A	100
PICCV-50-080	80	N/A	100
PICCV-50-090	90	N/A	100
PICCV-50-100	100	N/A	100

M40019 - 06/10 - Subject to change. © Belimo Aircontrols (USA), Inc.

This document details the flow verification and commissioning procedures for PICCV (pressure independent characterized control valves). The flow verification techniques contained within this document are optional and at the discretion of the Mechanical Engineer/Designer. These procedures are not mandatory to ensure proper operation of PICCV valves. Pressure independent control valves are very different than a pressure dependent control valve. Pressure variations in the system will not affect flow through the valve. The ability to adjust and/or control the flow rate which passes through the PI valve is not possible via another mechanical device and additional mechanical devices should not be used. This makes the TAB/ Commissioning process much different than with standard control valves. Pressure independent valves offer numerous maximum design flow values in each valve body size. It is important to note that most pressure independent valves will not travel a full 90 degrees of rotation when commanded to full design flow position. Design flow in a PICCV is adjusted through the maximum angle of ball travel. Therefore, if the valve's maximum flow setting is not at the end of the range, the valve will travel to a point less than 90 degrees. This is normal operation for pressure independent control valves.

Note to Mechanical Designer/Owner: It is essential that the mechanical contractor install three (3) independent pressure/temperature ports if the PICCV is not supplied with integrated ports. Please refer to Figure A contained in this document for P/T port locations. External P/T ports allow for true independent verification of proper PICCV operation. Additionally, the external P/T ports allow for future comprehensive troubleshooting and diagnosis once the system has been in operation for an extended time period.

For proper and accurate flow verification of the PICCV, it is essential that the mechanical contractor install two (2) separate independent pressure/temperature ports (P/Ts) if the PICCV valve body is supplied with integrated ports. (See Figure A -the integrated P/T port labeled 3b performs the same function as P/T port 3a).

I. P/T port #1 and P/T port #2 are used for measuring pressure differential across the coil (used to measure water pressure drop to equate to flow or to measure water temperature delta T through the coil).

II. P/T port #2 and P/T port #3a (or #3b if integrated into valve body) are used to measure pressure drop across the PICCV (must be between 5-50 psi pressure across valve body). Pressure Independent valve body must have required differential pressure within this range WITH VALVE ASSEMBLY COMMANDED TO DESIGN FLOW. Valve shall be commanded to design flow position via EMS signal. Do not manually open the valve with override handle. This pressure difference across the PICCV is necessary to ensure the valve is working pressure independently.

Pre Flow Verification System Checklist

In order to ensure a properly functioning hydronic system utilizing Pressure Independent Characterizing Control Valves, the mechanical contractor and/or T&B professional must verify that the following items have been confirmed before beginning flow verification.

Each flow verification / commissioning procedure presented in this document begins with a reference to the checklist contained below. This serves as a constant reminder to the flow verification professional that these parameters must be met so that proper flow results can be measured / obtained.

*Items to check before beginning flow verification procedure:

- Verify that System is purged of air and filled to proper pressure.
- Verify that each PICCV valve has at least 5 psi but less than 50 psi dP across the valve (fig. A) by following one of the following two measurement options:
  - Reading taken across P/T ports 2 & 3a
  - Reading taken across P/T port 2
- Verify Proper pump operation per manufacturers specifications.
- Verify proper supply water temperature is available and is at design temperature.
- Proper Air filter maintenance has been completed.
- Fan belts are in proper working order.
- Heat transfer devices (coils) are clean.
- Strainers are clean.
- All manual shutoff valves are open.

Figure A

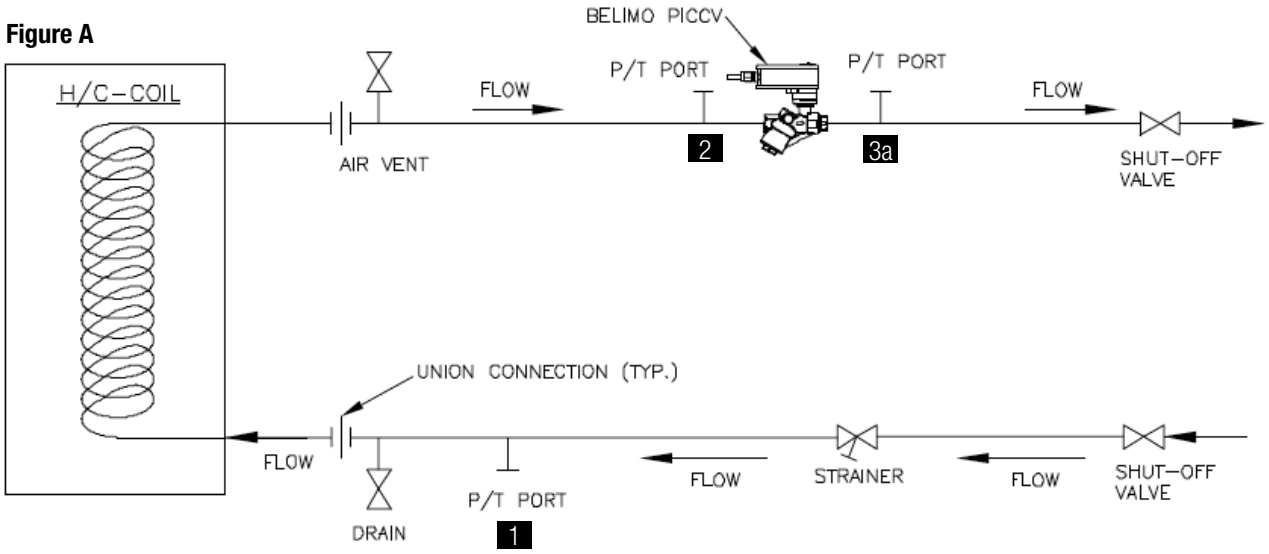

M40019 - 06/10 - Subject to change. © Belimo Aircontrols (USA), Inc.

- All bypass valves are closed.
- No automatic or manual balancing valves exist (or if they do, they must be set fully open and locked so as not to interfere with the pressure independency of the PICCV).

Below are the accepted procedures for verifying/commissioning pressure independent control valves.

Procedure #1 (System Verification) – Total System Flow Method

Verification for PICCV Cooling Valves/Heating Valves

1. Verify that System is in proper working order. *See Items to check before beginning flow verification procedure contained at the beginning of this document.
2. Command open all PICCVs in a given system via the building automation system if the total connected load matches the pump capacity and system diversity = 100%. Systems with less than 100% diversity need to have a % of valves closed to match pump capacity.
3. Ensure that pumps are commanded to 100% speed (or VFD control loop has high enough dP setpoint to satisfy connected load).
4. Verify total system flow is at system design flow rate via accurate method:
   - Calibrated Circuit Setter on main lines
   - Orifice
   - Venturi
   - Ultrasonic Flowmeter
5. Decrease the pump speed (or decrease dP setpoint if under control) until a measureable flow decrease occurs.
6. Increase pump speed (or increase dP setpoint if under control) slowly until design flow is reestablished. Make note of this final measured dP. This will be the correct system dP operating setpoint.

NOTE: If total flow does not match design flow then troubleshooting must be done to determine cause. This may involve verifying flows at the terminal level.

Procedure #2 (Terminal Level Verification) – Air DeltaT Method

Verification for PICCV Cooling Valves/Heating Valves

1. Verify that System is in proper working order. *See Items to check before beginning flow verification procedure contained at the beginning of this document.
2. Ensure that water is at design temperature.
3. Ensure that terminal airflow is at design airflow rate (cfm).
4. Command open pressure independent characterized control valve to maximum design flow position
5. Reference approved engineering document containing design air delta T for heating/cooling coil associated with corresponding pressure independent characterized control valve.
6. Measure coil inlet air temperature and coil discharge air temperature.
7. Difference between coil inlet air reading and coil discharge air reading should equal or exceed design air delta T.

Procedure #3 (Terminal Level Verification) – Water DeltaT Method

Verification for PICCV Cooling Valves/Heating Valves

1. Verify that System is in proper working order. *See Items to check before beginning flow verification procedure contained at the beginning of this document.
2. Ensure that water is at design temperature.
3. Ensure that terminal airflow is at design flow rate (cfm).
4. Command open pressure independent characterized control valve to maximum design flow position.
5. Reference approved engineering document containing design water deltaT for heating/cooling coil associated with corresponding pressure independent characterized control valve.
6. Measure water temperature differential of coil by using P/T ports #1 and #2 as referenced in Figure A.
7. Measured temperature differential should be equal to designed water temperature differential.

Procedure #4 (Terminal Level Verification) – Coil dP (DeltaP) Method

Verification for PICCV Cooling Valves and PICCV Heating Valves

1. Verify that System is in proper working order. *See Items to check before beginning flow verification procedure contained at the beginning of this document.
2. Command open pressure independent characterized control valve to maximum design flow position.
3. Reference approved engineering document containing design coil water pressure drop (usually expressed in ft. of H2O) for design flow. This value will be for the heating/cooling coil associated with corresponding pressure independent characterized control valve.
4. Measure coil dP by using P/T ports #1 & #2 as referenced in Fig. A.
5. Formula to calculate flow is:

Actual GPM = $\sqrt{(\text{Measured Coil dP/Design Coil dP})}$ x Design GPM

Note: Coil dP and Design dP expressed in feet of H2O.

M40019 - 06/10 - Subject to change. © Belimo Aircontrols (USA), Inc.

Field adjustment of maximum flow and /or flow accuracy.
(This function is not a requirement. This procedure is purely optional and is not a mandatory procedure for proper operation of PICCV valves.)
Flow Accuracy of the PICCV valve body is +/-10%. However, actuator hysteresis and installation can have an effect on measured accuracy of the PICCV assembly (actuator/valve) in the field. The accuracy of the PICCV assembly can be improved in the application.
The maximum flow setting and/or flow accuracy can be adjusted in the field using the Belimo PC-Tool or ZTH-PICCV (shown on next page). Please contact your local Belimo representative to obtain/purchase this tool or arrange to have a Belimo representative visit the project site to make adjustments.

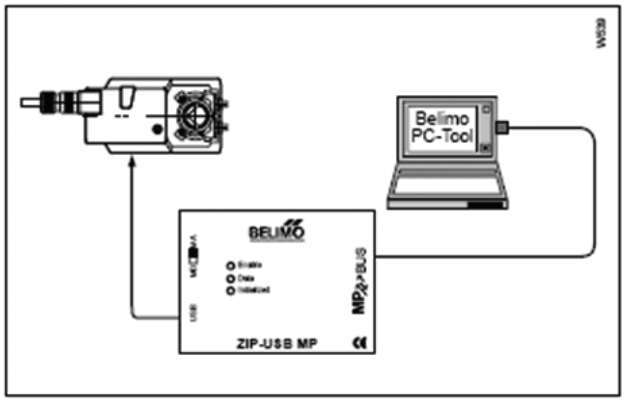

For additional information pertaining to the flow verification and commissioning industry, please visit the website of these organizations that promote the certification and continuing education of industry professionals in the Test and Balance discipline.
NEBB - National Environmental Balancing Bureau, http://www.nebb.org/
TABB - Testing Adjusting Balancing Bureau, http://www.tabbcertified.org/

M40019 - 06/10 - Subject to change. © Belimo Aircontrols (USA), Inc.

The ZTH-PICCV is a tool created to easily adapt the flow settings for the PICCV in the field. It directly connects to the Belimo actuator.

IMPORTANT:
There are two ways to connect the tool to the actuators

LR, AR, GM Series
Use the interface on the top of the actuator. (Leave all of the wires of the actuator installed.)

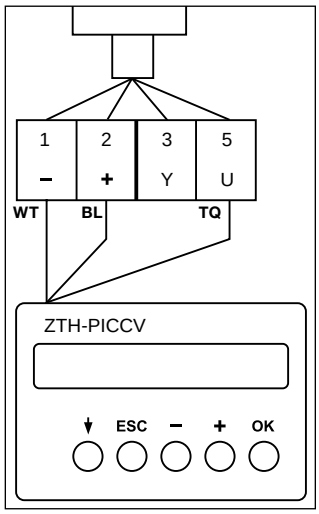

TF, LF, AF Series
Connect to the installed wires of the actuator.

Technical Information

Supply	24 VAC/DC
Communication	PP
Used with actuator types	LRX24-MFT TF24-MFT US LF24-MFT US ARX24-MFT AF24-MFT GMX24-MFT

RE-PROGRAMMING PROCESS:

Step 1
Connect cable to actuator port, twist to lock in place (or wire as above). Will display actuator for 5 seconds – note this and compare to actuator being connected.

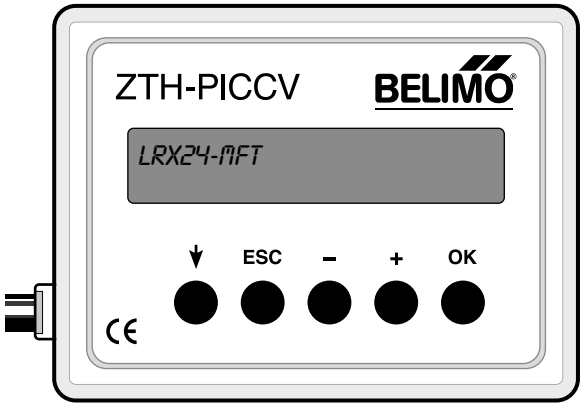

Step 2
Start PICCV PROCESS press OK will be displayed. Press OK.

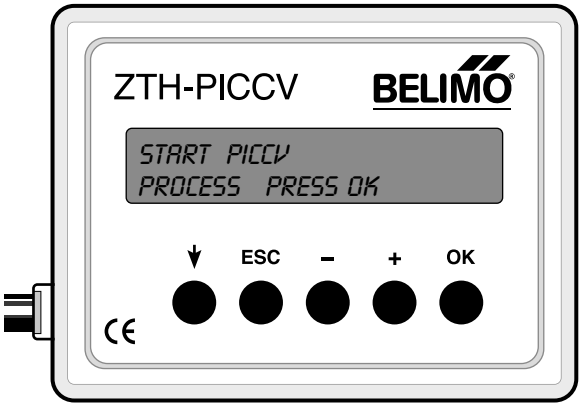

M40019 - 06/10 - Subject to change. © Belimo Aircontrols (USA), Inc.

Step 3

NC (or NO) – run to MAX? Press OK will be displayed. Press OK.
NOTE: if you need to change the NO/NC action for the actuator, then you must use the PC-Tool. Changing the switch will not accomplish this. Do not change the Y1/Y2 switch.

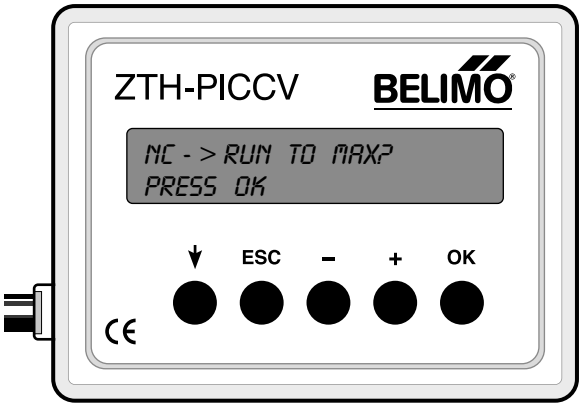

Step 4

Actuator will drive to current setting (MAX for NC, Min for NO). When it stops, adjust using + and – buttons. As it is running, it will show actual value as the actuator moves.

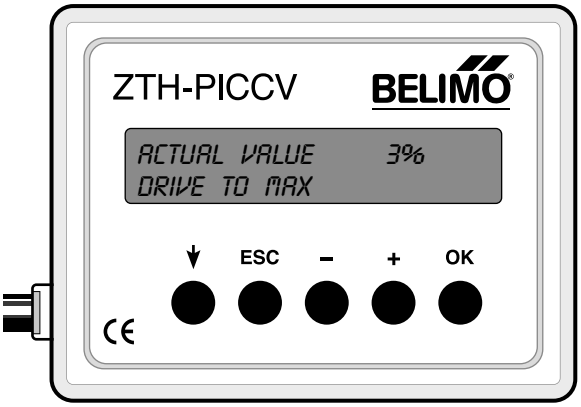

Step 5

HOLD DOWN the – or + button down to adjust setting. If you disengage the button, then the word "stop" appears and will change to "hold". When setting is changed as needed, press OK.
To re-test flow, drive actuator to 80% of current setting and then re-drive to setting.
(Ex: setting 70%, drive to 56% or lower and then drive back to 70%.)

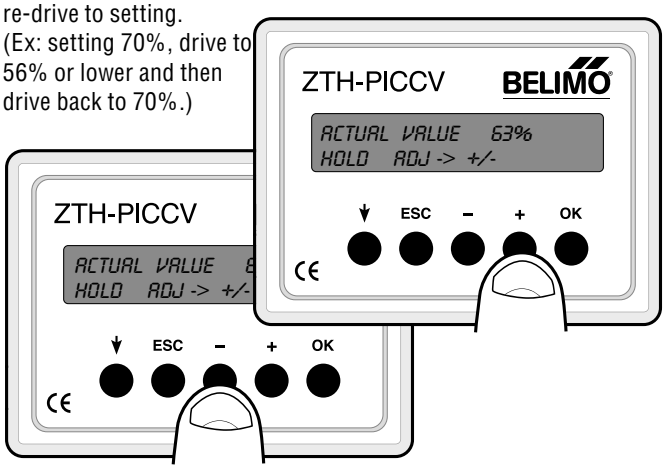

Step 6

Display will state – **SAVE to MAX** (if NC) or **SAVE to MIN** (if NO). Press OK.

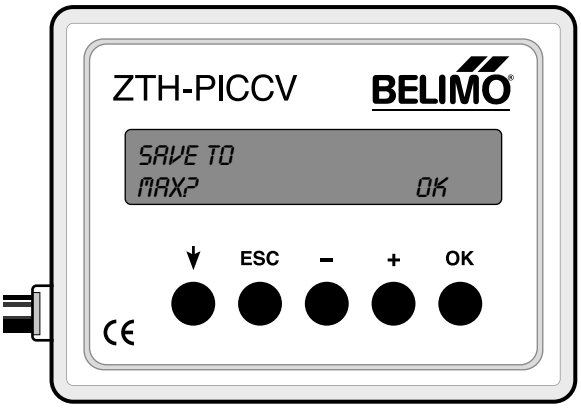

Step 7

Disconnect tool by twisting and re-cover connection port (or un-wire actuator). You do not need to wait until actuator stops running to disconnect.

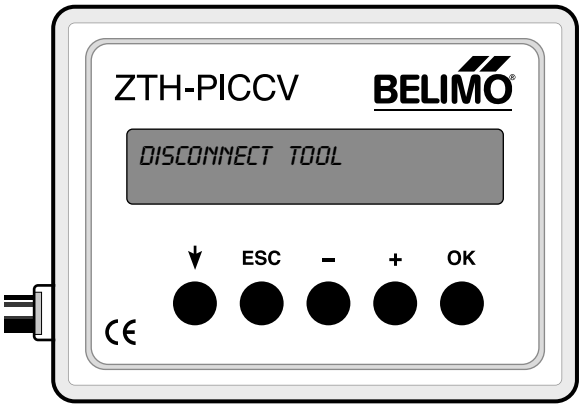

Advanced Mode

- Enter the configuration menu by pressing "OK" (hold button) while connecting the ZTH-PICCV to the actuator.
- Step through with arrow key to "Advanced Mode" menu
- Change mode from 0 to 1
- Unplug the ZTH-PICCV
- With advanced mode, change runtime, control signal (2-10 VDC, 0-10 VDC).

M40019 - 06/10 - Subject to change. © Belimo Aircontrols (USA), Inc.

Models

LRB24-3
LRB24-3-S w/built-in Aux. Switch
LRX24-3

Technical Data	
Power supply	24 VAC ± 20% 50/60 Hz 24 VDC ± 10%
Power consumption running	1.5 W
holding	0.2 W
Transformer sizing	2 VA (class 2 power source)
Electrical connection	3 ft, 18 GA, Plenum rated cable ½" conduit connector
Overload protection	electronic throughout 0° to 95° rotation
Control	On/Off, Floating Point
Input impedance	600 Ω
Angle of rotation	90°, adjustable with mechanical stop
Direction of rotation	reversible with protected ↷/↶ switch
Position indication	handle
Manual override	external push button
Running time	95 seconds, constant independent of load
Humidity	5 to 95% RH, non-condensing (EN 60730-1)
Ambient temperature	-22°F to 122°F [-30°C to 50°C]
Storage temperature	-40°F to 176°F [-40°C to 80°C]
Housing type	NEMA 2/IP54
Housing material	UL94-5VA
Agency listings†	cULus acc. to UL60730-1A/-2-14, CAN/CSA E60730-1, CSA C22.2 No. 24-93, CE acc. to 89/336/EEC
Noise level	less than 35 dB (A)
Quality standard	ISO 9001

LRB24-3-S	
Auxiliary switch	1 SPDT, 3A (0.5A) @ 250 VAC, UL Listed, adjustable 0° to 100°

† Rated impulse voltage 800V, Control pollution degree 3, Type of action 1 (1.B for -S models)

Dimensions with PICCV

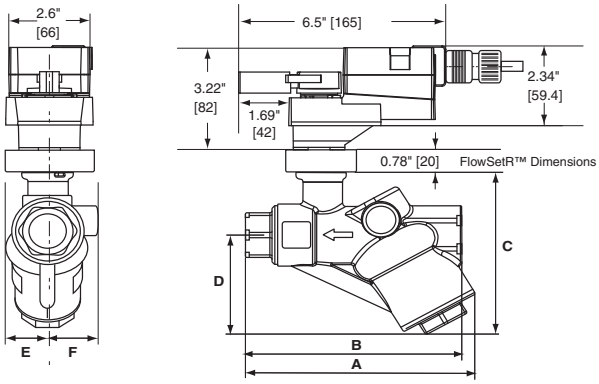

Valve Nominal Size		Dimensions (Inches [mm])					
In.	DN [mm]	A	B	C	D	E	F
½"	15	4.68 [119]	4.47 [114]	4.05 [103]	2.34 [60]	0.99 [25]	0.99 [25]
¾" after 8/2009	20	4.90 [125]	4.94 [126]	4.05 [103]	2.34 [60]	0.99 [25]	0.99 [25]
¾" until 8/2009	20	5.35 [133]	5.03 [128]	4.22[107]	2.38 [61]	1.04 [26]	1.30 [34]
1"	25	7.05 [179]	6.85 [174]	4.80 [122]	3.23 [82]	1.60 [41]	1.60 [41]

M40019 - 06/10 - Subject to change. © Belimo Aircontrols (USA), Inc.

Wiring Diagrams

INSTALLATION NOTES

CAUTION *Equipment damage!*
Actuators may be connected in parallel.
Power consumption and input impedance must be observed.
Actuators are provided with color coded wires.
Wire numbers are provided for reference.

Actuators may also be powered by 24 VDC.

APPLICATION NOTES

Meets cULus or UL and CSA requirements without the need of an electrical ground connection.

WARNING *Live Electrical Components!*
During installation, testing, servicing and troubleshooting of this product, it may be necessary to work with live electrical components. Have a qualified licensed electrician or other individual who has been properly trained in handling live electrical components perform these tasks. Failure to follow all electrical safety precautions when exposed to live electrical components could result in death or serious injury.

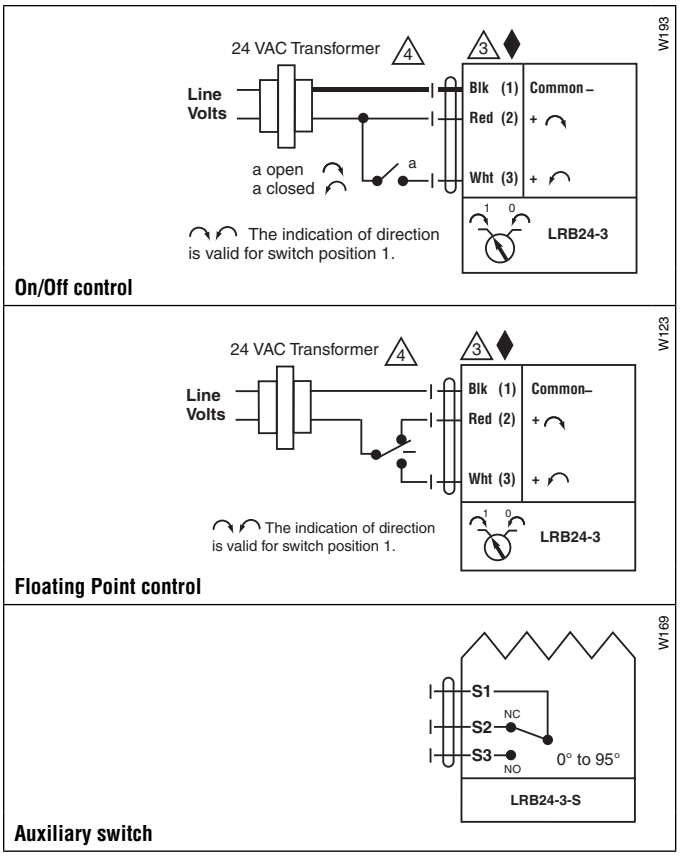

M40019 - 06/10 - Subject to change. © Belimo Aircontrols (USA), Inc.

Models

LRCB24-3
LRCB24-3-S

Technical Data

Power supply	24 VAC ± 20% 50/60 Hz 24 VDC ± 10%
Power consumption running	1.5 W
holding	0.2 W
Transformer sizing	2.5 VA (Class 2 power source)
Electrical connection	18 GA plenum rated cable 1/2" conduit connector ❑ 3 ft [1m] ❑ 10 ft [3m] ❑ 16 ft [5m]
Overload protection	electronic throughout rotation
Control	On/Off
Input impedance	600 Ω
Angle of rotation	95°
Direction of Rotation	reversible with protected ↷/↶ switch
Position indication	handle
Manual override	external push button and handle
Running time	40 second constant independent of load
Ambient temperature	-22° F to 122° F [-30° C to 50° C]
Housing	NEMA 2 / IP54
Housing Material	UL94-5VA
Agency listings	cULus acc. to UL60730-1A/-2-14, CAN/CSA E60730-1, CSA C22.2 No. 24-93, CE acc. to 89/336/EEC and (-S Models) 2006/95/EC†
Noise level	max. 35 dB(A)

LRCB24-3-S	
Auxiliary switches	1 SPDT, 3A (0.5A inductive) @ 250 V

†Rated Impulse Voltage 800V, Type of action 1 (1.B for -S version), Control Pollution Degree 3.

Application

The Pressure Independent Characterized Control Valve along with the LRCB24-3 is paired together specifically for use in Heat Pump applications to precisely control the flow of condenser water. This assembly is suitable for use in a hydronic system with constant or variable flow.

Dimensions with PICCV

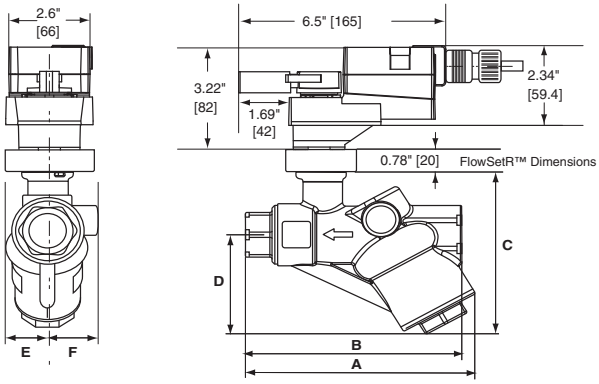

Valve Nominal Size In.	DN [mm]	A	B	C	D	E	F
		Dimensions (Inches [mm])					
½"	15	4.68 [119]	4.47 [114]	4.05 [103]	2.34 [60]	0.99 [25]	0.99 [25]
¾" after 8/2009	20	4.90 [125]	4.94 [126]	4.05 [103]	2.34 [60]	0.99 [25]	0.99 [25]
¾" until 8/2009	20	5.35 [133]	5.03 [128]	4.22[107]	2.38 [61]	1.04 [26]	1.30 [34]
1"	25	7.05 [179]	6.85 [174]	4.80 [122]	3.23 [82]	1.60 [41]	1.60 [41]

M40019 - 06/10 - Subject to change. © Belimo Aircontrols (USA), Inc.

Wiring Diagrams

INSTALLATION NOTES

1 Provide overload protection and disconnect as required.

3 Actuators may also be powered by 24 VDC.

APPLICATION NOTES

Meets cULus or UL and CSA requirements without the need of an electrical ground connection.

WARNING *Live Electrical Components!*
During installation, testing, servicing and troubleshooting of this product, it may be necessary to work with live electrical components. Have a qualified licensed electrician or other individual who has been properly trained in handling live electrical components perform these tasks. Failure to follow all electrical safety precautions when exposed to live electrical components could result in death or serious injury.

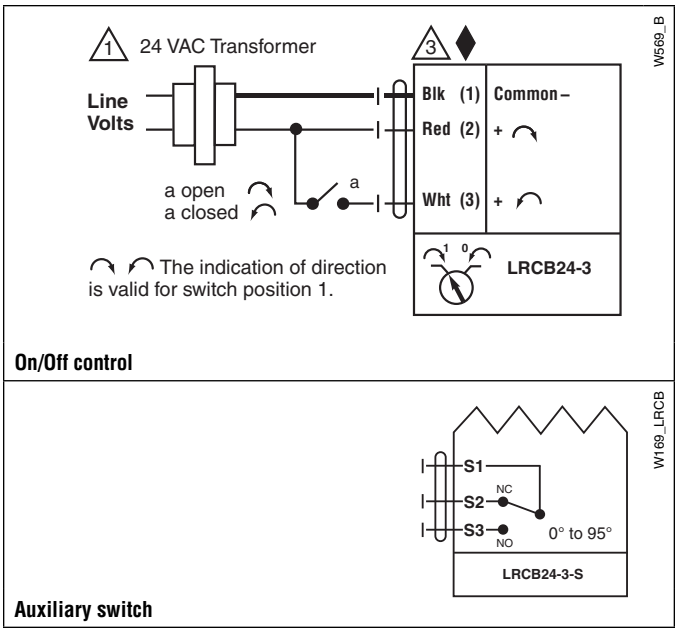

M40019 - 06/10 - Subject to change. © Belimo Aircontrols (USA), Inc.

Models

LRX120-3

Technical Data	
Control	On/Off, Floating Point
Power supply	100 to 240 VAC, 50/60 Hz (nominal) 85 to 265 VAC, 50/60 Hz (tolerance)
Power consumption running	2 W
holding	0.5 W
Transformer sizing	4 VA (class 2 power source)
Electrical connection LRB120-3 LRX120-3	½" conduit connector 18 GA, plenum rated cable 3 ft [1m] ❑ 3 ft [1m] ❑ 10 ft [3m] ❑ 16 ft [5m]
Overload protection	electronic throughout 0° to 95° rotation
Input impedance	600 Ω
Angle of rotation	90°, adjustable with mechanical stop
Direction of rotation	reversible with protected ↷/↶ switch
Position indication	handle
Manual override	external push button
Running time LRB120-3 LRX120-3	 90 seconds, constant independent of load ❑ 150 ❑ 95 ❑ 60 ❑ 45 ❑ 35 seconds, constant independent of load
Humidity	5 to 95% RH non-condensing (EN 60730-1)
Ambient temperature	-22°F to 122°F [-30°C to 50°C]
Storage temperature	-40°F to 176°F [-40°C to 80°C]
Housing	NEMA 2/IP54
Housing material	UL94-5VA
Agency listings†	cULus acc. to UL 60730-1A/-2-14, CAN/CSA E60730-1, CSA C22.2 No. 24-93, CE acc. to 89/336/EEC (and 2006/95/EC for line voltage and/or -S versions)
Noise level	<35 dB(A)
Quality standard	ISO 9001

† Rated impulse voltage 4kV, Control pollution degree 3, Type of action 1

Dimensions with 2-Way Valve

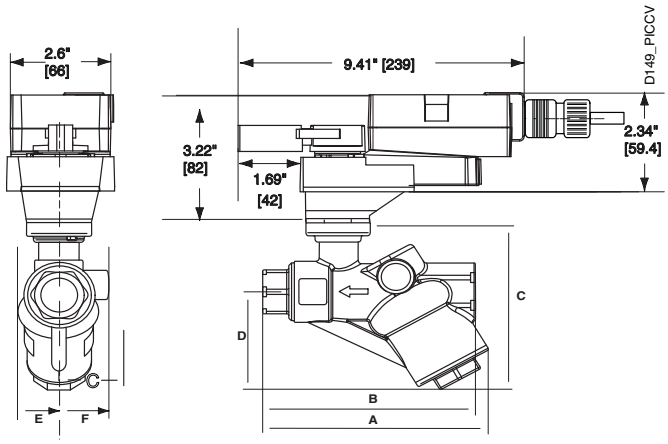

Valve Nominal Size		Dimensions (Inches [mm])					
In.	DN [mm]	A	B	C	D	E	F
½"	15	4.68 [119]	4.47 [114]	4.05 [103]	2.34 [60]	0.99 [25]	0.99 [25]
¾" after 8/2009	20	4.90 [125]	4.94 [126]	4.05 [103]	2.34 [60]	0.99 [25]	0.99 [25]
¾" until 8/2009	20	5.35 [133]	5.03 [128]	4.22[107]	2.38 [61]	1.04 [26]	1.30 [34]
1"	25	7.05 [179]	6.85 [174]	4.80 [122]	3.23 [82]	1.60 [41]	1.60 [41]

M40019 - 06/10 - Subject to change. © Belimo Aircontrols (USA), Inc.

Wiring Diagrams

INSTALLATION NOTES

CAUTION *Equipment damage!*
Actuators may be connected in parallel.
Power consumption and input impedance must be observed.

APPLICATION NOTES

Meets cULus or UL and CSA requirements without the need of an electrical ground connection.

WARNING *Live Electrical Components!*
During installation, testing, servicing and troubleshooting of this product, it may be necessary to work with live electrical components. Have a qualified licensed electrician or other individual who has been properly trained in handling live electrical components perform these tasks. Failure to follow all electrical safety precautions when exposed to live electrical components could result in death or serious injury.

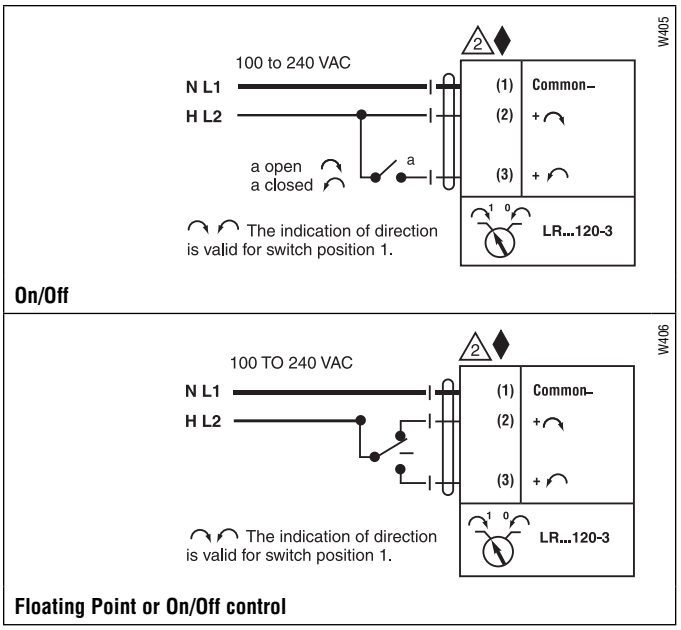

M40019 - 06/10 - Subject to change. © Belimo Aircontrols (USA), Inc.

MFT 5 YEAR WARRANTY

Model

LRX24-MFT

Technical Data	
Power supply	24 VAC ± 20% 50/60 Hz 24 VDC ± 10%
Power consumption running	2 W
holding	1.2 W
Transformer sizing	5 VA (class 2 power source)
Electrical connection	18 GA plenum rated cable 1/2" conduit connector ❑ 3 ft [1m] ❑ 10 ft [3m] ❑ 16 ft [5m]
Overload protection	electronic throughout 0° to 95° rotation
Operating range Y	2 to 10 VDC, 4 to 20 mA (default) Variable (VDC, PWM, Floating Point, On/Off)
Input impedance	100 kΩ (0.1 mA), 500 Ω 1500 Ω (PWM, Floating Point, On/Off)
Feedback output U	2 to 10 VDC, 0.5mA max VDC Variable
Angle of rotation	max. 95°, adjust. with mechanical stop electronically variable
Torque	45 in-lb [5 Nm]
Direction of rotation	reversible with protected ↷/↶ switch
Position indication	handle
Manual override	external push button
Running time	100 seconds Variable (35 to 150 secs)
Humidity	5 to 95% RH non condensing (EN 60730-1)
Ambient temperature	-22°F to 122°F [-30°C to 50°C]
Storage temperature	-40°F to 176°F [-40°C to 80°C]
Housing	NEMA 2/IP54
Housing material	UL94-5VA
Agency listings†	cULus acc. to UL60730-1A/-2-14, CAN/CSA E60730-1, CSA C22.2 No. 24-93, CE acc. to 89/336/EEC
Noise level	<35dB(A)
Quality standard	ISO 9001
Weight	1.5 lbs [0.7 kg]

† Rated impulse voltage 800V, Control pollution degree 3,
Type of action 1 (1.B for -S models)

Dimensions with PICCV

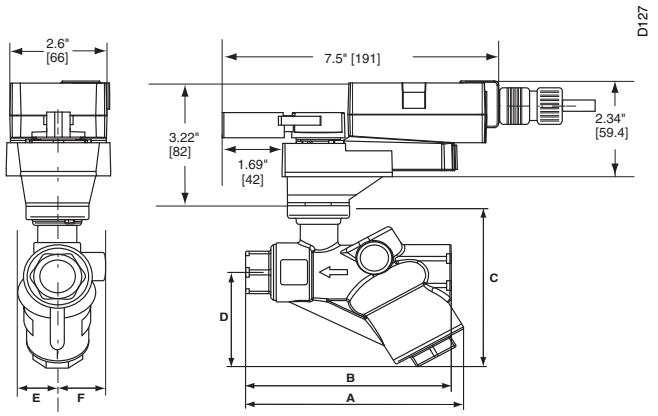

Valve Nominal Size		Dimensions (Inches [mm])					
In.	DN [mm]	A	B	C	D	E	F
½"	15	4.68 [119]	4.47 [114]	4.05 [103]	2.34 [60]	0.99 [25]	0.99 [25]
¾" after 8/2009	20	4.90 [125]	4.94 [126]	4.05 [103]	2.34 [60]	0.99 [25]	0.99 [25]
¾" until 8/2009	20	5.35 [133]	5.03 [128]	4.22[107]	2.38 [61]	1.04 [26]	1.30 [34]
1"	25	7.05 [179]	6.85 [174]	4.80 [122]	3.23 [82]	1.60 [41]	1.60 [41]

M40019 - 06/10 - Subject to change. © Belimo Aircontrols (USA), Inc.

Wiring Diagrams

INSTALLATION NOTES

2 **CAUTION** *Equipment damage!*
Actuators may be connected in parallel.
Power consumption and input impedance must be observed.

3 Actuators may also be powered by 24 VDC.

4 Position feedback cannot be used with Triac sink controller.
The actuator internal common reference is not compatible.

6 Control signal may be pulsed from either the Hot (source) or the Common (sink) 24 VAC line.

8 Contact closures A & B also can be triacs.
A& B should both be closed for triac source and open for triac sink.

9 For triac sink the common connection from the actuator must be connected to the hot connection.

APPLICATION NOTES

The ZG-R01 500 Ω resistor converts the 4 to 20 mA control signal to 2 to 10 VDC, up to 2 actuators may be connected in parallel.

WARNING *Live Electrical Components!*
During installation, testing, servicing and troubleshooting of this product, it may be necessary to work with live electrical components. Have a qualified licensed electrician or other individual who has been properly trained in handling live electrical components perform these tasks. Failure to follow all electrical safety precautions when exposed to live electrical components could result in death or serious injury.

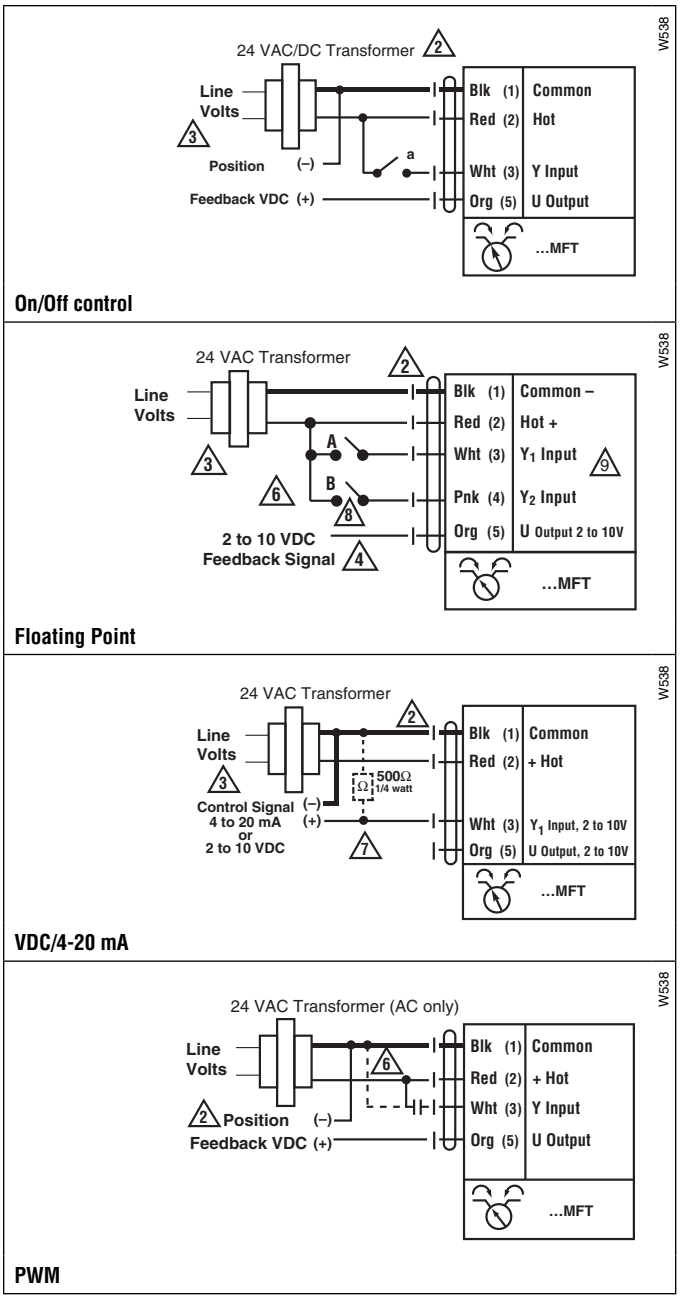

M40019 - 06/10 - Subject to change. © Belimo Aircontrols (USA), Inc.

MFT

5 YEAR WARRANTY

Models

ARX24-MFT

Technical Data	
Power supply	24 VAC ± 20% 50/60 Hz 24 VDC ± 10%
Power consumption running	4 W
Power consumption holding	1.25 W
Transformer sizing	6 VA (class 2 power source)
Electrical connection ARB24-MFT ARX24-MFT	½” conduit connector 18 GA plenum rated cable 3 ft [1m] ❑ 3 ft [1m] ❑ 10 ft [3m] ❑ 16 ft [5m]
Overload protection	electronic throughout 0° to 95° rotation
Operating range Y	2 to 10 VDC, 4 to 20 mA (default) Variable (VDC, PWM, Floating Point, On/Off)
Input impedance	100 kΩ (0.1 mA), 500 Ω 1500 Ω (PWM, Floating Point, On/Off)
Feedback output U	2 to 10 VDC, 0.5 mA max VDC Variable
Angle of rotation	95° electronically variable
Direction of rotation	reversible with protected ↷/↶ switch
Position indication	handle
Manual override	external push button
Running time ARB24-MFT	 100 seconds
Humidity	5 to 95% RH non-condensing (EN 60730-1)
Ambient temperature	-22°F to 122°F [-30°C to 50°C]
Storage temperature	-40°F to 176°F [-40°C to 80°C]
Housing	NEMA 2/IP54
Housing material	UL94-5VA
Agency listings†	cULus acc. to UL60730-1A/-2-14, CAN/CSA E60730-1, CSA C22.2 No. 24-93, CE acc. to 89/336/EEC
Noise level	<45 dB(A)
Quality standard	ISO 9001

† Rated impulse voltage 4kV, Control pollution degree 3, Type of action 1

Dimensions with PICCV

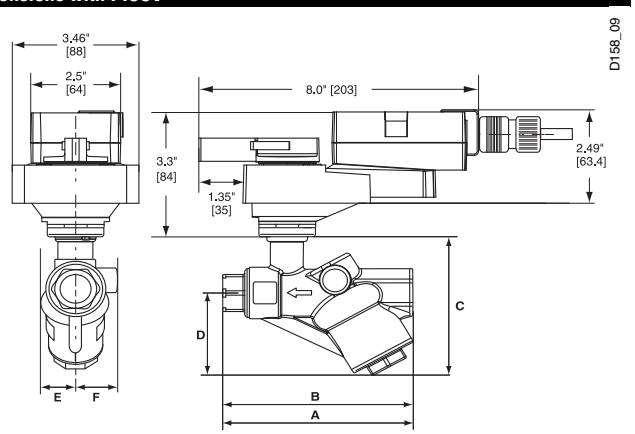

Valve Nominal Size In.	DN [mm]	A	B	C	D	E	F
		Dimensions (Inches [mm])					
1¼”	32	8.19 [208]	8.19 [208]	5.67 [144]	3.66 [93]	1.77 [45]	1.61 [41]
1½”	40	8.03 [204]	8.03 [204]	5.67 [144]	3.66 [93]	1.77 [45]	1.61 [41]
2”	50	8.50 [216]	8.50 [216]	5.91 [150]	3.66 [93]	1.77 [45]	1.61 [41]

2” NPT with flows to 40 GPM.

Dimensions with PICCV P/T Ports

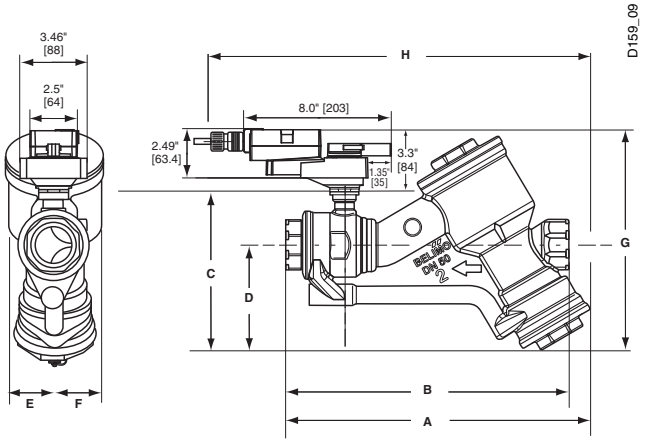

Valve Nominal Size In.	DN [mm]	A	B	C	D
		Dimensions (Inches [mm])			
2”	50	16.39 [416]	15.60 [396]	8.94 [227]	5.87 [149]

Valve Nominal Size In.	DN [mm]	E	F	G	H
		Dimensions (Inches [mm])			
2”	50	2.64 [67]	2.64 [67]	12.83 [326]	21.90 [556]

2” NPT with larger flows from 44 GPM to 100 GPM

M40019 - 06/10 - Subject to change. © Belimo Aircontrols (USA), Inc.

Wiring Diagrams

INSTALLATION NOTES

CAUTION *Equipment damage!*
Actuators may be connected in parallel.
Power consumption and input impedance must be observed.

3 Actuators may also be powered by 24 VDC.

4 Position feedback cannot be used with Triac sink controller.
The actuator internal common reference is not compatible.

6 Control signal may be pulsed from either the Hot (source) or the Common (sink) 24 VAC line.

8 Contact closures A & B also can be triacs.
A& B should both be closed for triac source and open for triac sink.

9 For triac sink the common connection from the actuator must be connected to the hot connection.

APPLICATION NOTES

The ZG-R01 500 Ω resistor converts the 4 to 20 mA control signal to 2 to 10 VDC, up to 2 actuators may be connected in parallel.

WARNING *Live Electrical Components!*
During installation, testing, servicing and troubleshooting of this product, it may be necessary to work with live electrical components. Have a qualified licensed electrician or other individual who has been properly trained in handling live electrical components perform these tasks. Failure to follow all electrical safety precautions when exposed to live electrical components could result in death or serious injury.

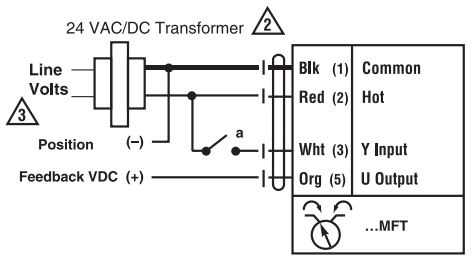

On/Off control

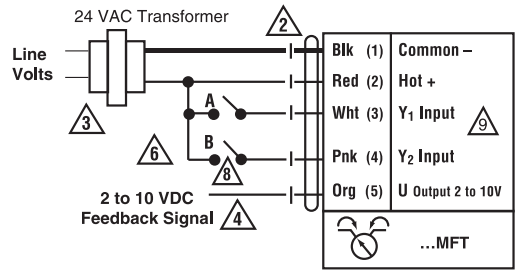

Floating Point

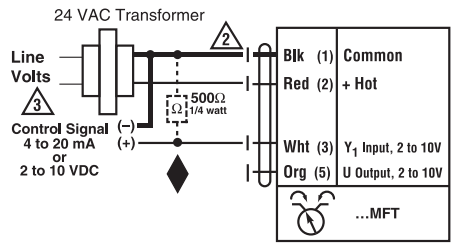

VDC/4-20 mA

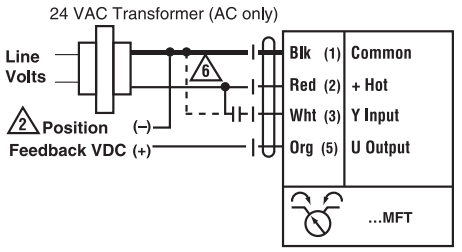

PWM

M40019 - 06/10 - Subject to change. © Belimo Aircontrols (USA), Inc.

MFT 5 YEAR WARRANTY

Models

TF24-MFT US

Technical Data	
Control	MFT
Power supply	24 VAC ± 20% 50/60 Hz 24 VDC ± 10%
Power consumption running	2.5 W
holding	1.0 W
Transformer sizing	4 VA (class 2 power source)
Electrical connection	3 ft, 18 GA plenum rated cable ½" conduit connector
Overload protection	electronic throughout 0° to 95° rotation
Operating range Y*	2 to 10 VDC 4 to 20 mA (w/500 Ω, ¼ W resistor) ZG-R01
Input impedance	100k Ω for 2 to 10 VDC (0.1 mA) 500 Ω for 4 to 20 mA 1500 Ω for PWM, Floating point and On-Off control
Feedback output U*	2 to 10 VDC, 0.5 mA max
Direction of rotation spring	reversible with CW/CCW mounting
motor	reversible with built-in ↷/↶ switch
Mechanical angle of rotation*	95°
Running time motor*	100 seconds
spring	<25 sec @-4°F to 122°F [-20°C to 50°C] <60 sec @-22°F [-30°C]
Angle of Rotation Adaptation*	Off (Default)
Override control*	Min. (Min Position) = 0% - ZS (Mid. Position) = 50% - Max. (Max. Position) = 100%
Position indication	visual indicator, 0° to 95°
Humidity	5 to 95% RH, non-condensing
Ambient temperature	-22 to 122° F (-30 to 50° C)
Storage temperature	-40 to 176° F (-40 to 80° C)
Housing	NEMA 2/IP42
Housing material	UL 94-5VA
Noise level (max) running	<35 dB (A)
spring return	<65 dB (A)
Agency listings†	cULus acc. to UL60730-1A/-2-14, CAN/CSA E60730-1, CSA C22.2 No.24-93, CE acc to 89/336/EEC
Quality standard	ISO 9001

* Variable when configured with MFT options
† Rated impulse voltage 0.8 kV, Control pollution degree 3, Type of action 1.AA.

Dimensions with PICCV

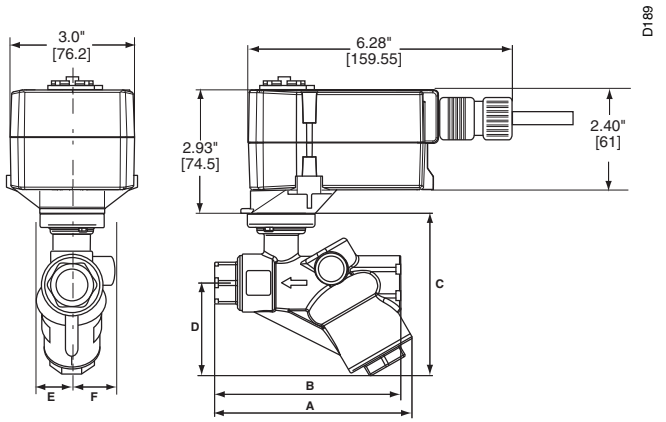

Valve Nominal Size		Dimensions (Inches [mm])					
In.	DN [mm]	A	B	C	D	E	F
½"	15	4.68 [119]	4.47 [114]	4.05 [103]	2.34 [60]	0.99 [25]	0.99 [25]

M40019 - 06/10 - Subject to change. © Belimo Aircontrols (USA), Inc.

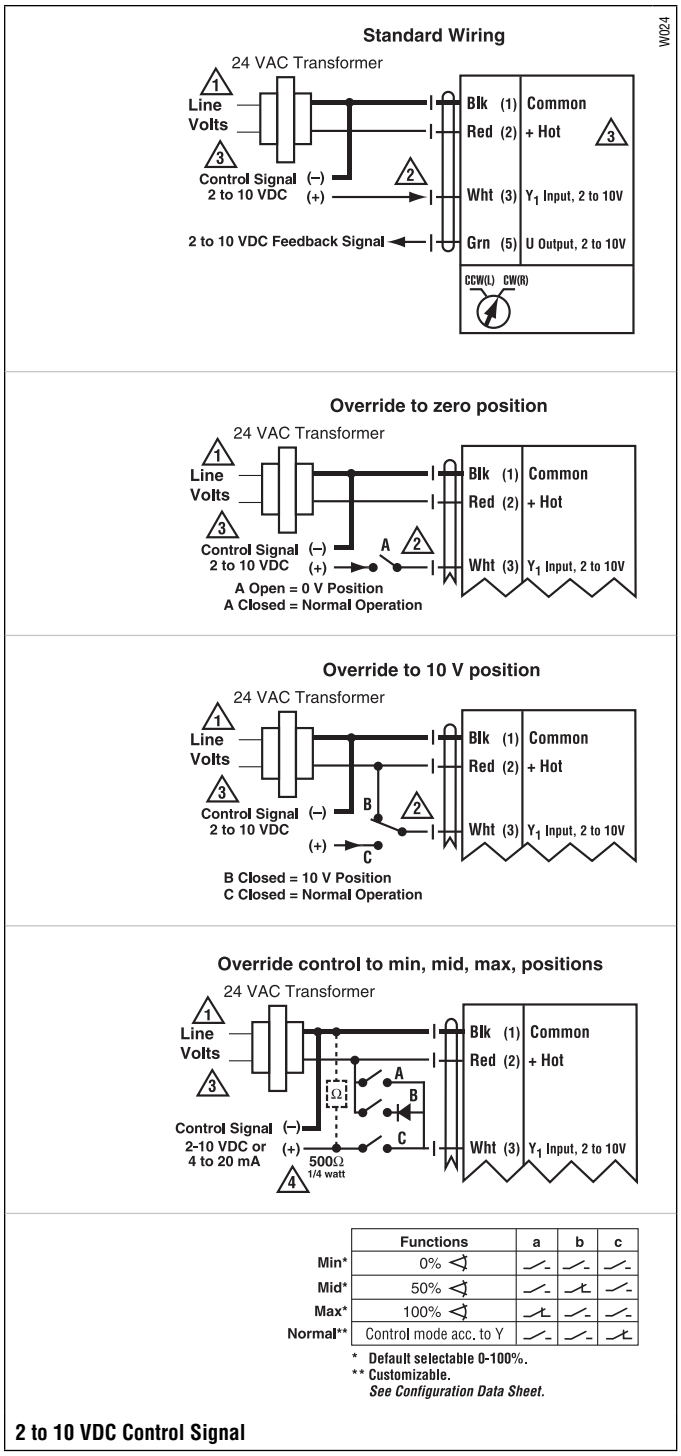

	Functions	a	b	c
Min*	0%			
Mid*	50%			
Max*	100%			
Normal**	Control mode acc. to Y			

* Default selectable 0-100%.
** Customizable.
See Configuration Data Sheet.

2 to 10 VDC Control Signal

Wiring Diagrams

INSTALLATION NOTES

1. Provide overload protection and disconnect as required.
2. ***CAUTION*** *Equipment damage!*
   Actuators may be connected in parallel.
   Power consumption and input impedance must be observed.
3. Actuators may also be powered by 24 VDC.
4. ZG-R01 may be used.

WARNING *Live Electrical Components!*
During installation, testing, servicing and troubleshooting of this product, it may be necessary to work with live electrical components. Have a qualified licensed electrician or other individual who has been properly trained in handling live electrical components perform these tasks. Failure to follow all electrical safety precautions when exposed to live electrical components could result in death or serious injury.

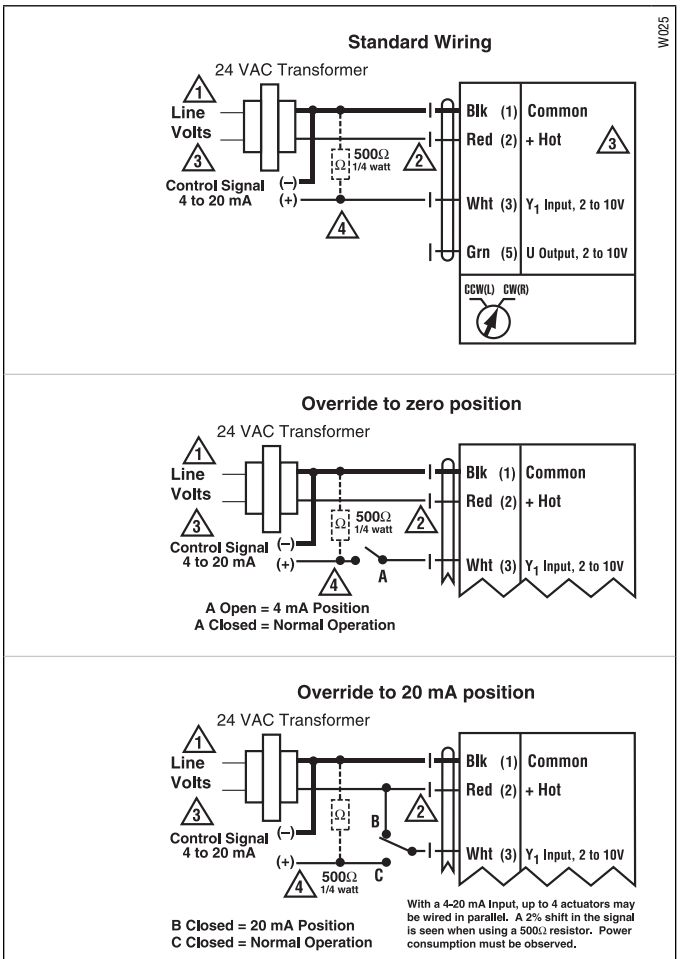

4 to 20 mA Control Signal

M40019 - 06/10 - Subject to change. © Belimo Aircontrols (USA), Inc.

MFT 5 YEAR WARRANTY

Models

LF24-MFT US
LF24-MFT-S US w/built-in Aux. Switch

Technical Data		
Control		MFT
Control signal		2 to 10 VDC
Power consumption	running	2.5 W
	holding	1 W
Transformer sizing		5 VA (class 2 power source)
Electrical connection		3 ft, 18 GA appliance cables (-S model has 2 cables) ½" conduit connector
Overload protection		electronic throughout 0° to 95° rotation
Input impedance		100k Ω for 2 to 10 VDC (0.1 mA) 500 Ω for 4 to 20mA 750 Ω for PWM 500 Ω for on/off and floating point
Feedback		2 to 10 VDC, 0.5 mA max
Angle of rotation		95°
Direction of rotation	spring	reversible with CW/CCW mounting
	motor	reversible with built-in ↷/↶ switch
Position indication		visual indicator
Running time		<40 to 75 sec. (on-off) 100 seconds
	spring	<25 sec. @-4°F to +122°F [-20°C to +50°C] <60 sec. @-22°F [-30°C]
Ambient temperature		-22° F to 122° F [-30° C to 50° C]
Housing		NEMA 2
Agency listings		UL 873, CSA C22.2 No. 24 certified, CE
Noise level		max. 62 dB(A)
Quality standard		ISO 9001

LF24-MFT-S US	
Auxiliary switch	1 x SPDT, 6A (1.5A) @ 250 VAC, UL Listed, adjustable 0° to 95° (double insulated)

Dimensions with PICCV

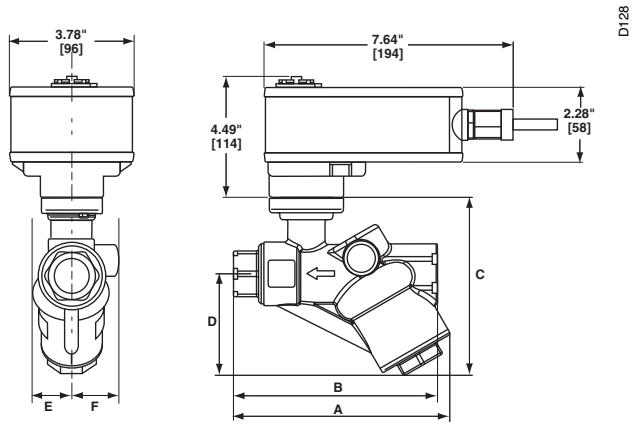

Valve Nominal Size		Dimensions (Inches [mm])					
In.	DN [mm]	A	B	C	D	E	F
½"	15	4.68 [119]	4.47 [114]	4.05 [103]	2.34 [60]	0.99 [25]	0.99 [25]
¾" after 8/2009	20	4.90 [125]	4.94 [126]	4.05 [103]	2.34 [60]	0.99 [25]	0.99 [25]
¾" until 8/2009	20	5.35 [133]	5.03 [128]	4.22[107]	2.38 [61]	1.04 [26]	1.30 [34]
1"	25	7.05 [179]	6.85 [174]	4.80 [122]	3.23 [82]	1.60 [41]	1.60 [41]

M40019 - 06/10 - Subject to change. © Belimo Aircontrols (USA), Inc.

Wiring Diagrams

INSTALLATION NOTES

CAUTION *Equipment damage!*
Actuators may be connected in parallel if not mechanically mounted to the same shaft. Power consumption and input impedance must be observed.

Actuators may also be powered by 24 VDC.

IN4004 or IN4007 diode (IN4007 supplied, Belimo part number 40155).

Triac A and B can also be contact closures.

Control signal may be pulsed from either the Hot (Source) or Common (Sink) 24 VAC line.

Position feedback cannot be used with Triac sink controller. The actuators internal common reference is not compatible.

APPLICATION NOTES

The ZG-R01 500 Ω resistor converts the 4 to 20 mA control signal to 2 to 10 VDC, up to 2 actuators may be connected in parallel.

WARNING *Live Electrical Components!*
During installation, testing, servicing and troubleshooting of this product, it may be necessary to work with live electrical components. Have a qualified licensed electrician or other individual who has been properly trained in handling live electrical components perform these tasks. Failure to follow all electrical safety precautions when exposed to live electrical components could result in death or serious injury.

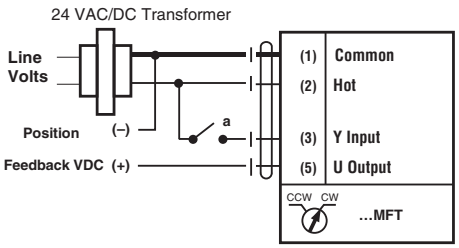

On/Off control

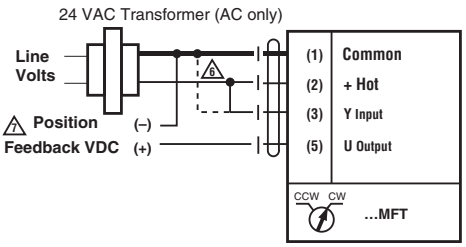

PWM, triac source and sink

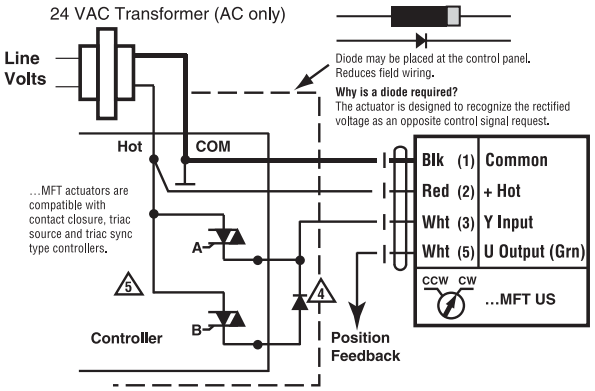

Floating Point control

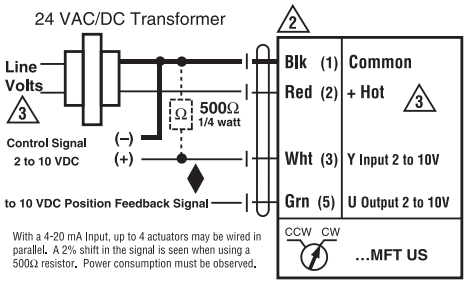

Proportional 2 to 10 or 4 to 20 mA control signal

M40019 - 06/10 - Subject to change. © Belimo Aircontrols (USA), Inc.

MFT

5 YEAR WARRANTY

LISTED 94 05 TEMP. IND. & REG. EQUIP.

Models

AF24-MFT US
AF24-MFT-S US w/built-in Aux. Switches

Technical Data		
Control		MFT
Control signal		2 to 10 VDC, (4 to 20 mA with 500 Ω resistor)
Power supply		24 VAC ± 20% 50/60 Hz 24 VDC ± 10%
Power consumption	running	6 W
	holding	2.5 W
Transformer sizing		10 VA, class 2 power
Electrical connection (-S model has 2 cables)		½" conduit connector 3 ft [1m], 18 GA appliance cable
Overload protection		electronic throughout rotation
Input impedance		100 kΩ for 2 to 10 VDC (0.1 mA) 500 Ω for 4 to 20 mA 750 Ω for PWM 1500 Ω for on/off and floating point
Feedback output		2 to 10 VDC, 0.5 mA max (variable)
Angle of rotation		95°
Direction of Rotation	spring	reversible with CW/CCW mounting
	motor	reversible with built-in ↷/↶ switch
Position indication		visual indicator
Manual override		hex crank
Running time	motor	100 seconds
	spring	<20 sec.
Ambient temperature		-22° F to 122° F [-30° C to 50° C]
Housing		NEMA 2 / IP54
Agency listings		UL 873, CSA C22.2 No. 24 certified, CE
Noise level		max. 45 dB(A)
AF24-MFT-S US		
Auxiliary switches		2 x SPDT, 7A (2.5A) @ 250 VAC, UL listed, one switch is fixed at +5°, one is adjustable 25° to 85° (double insulated)

Dimensions with PICCV

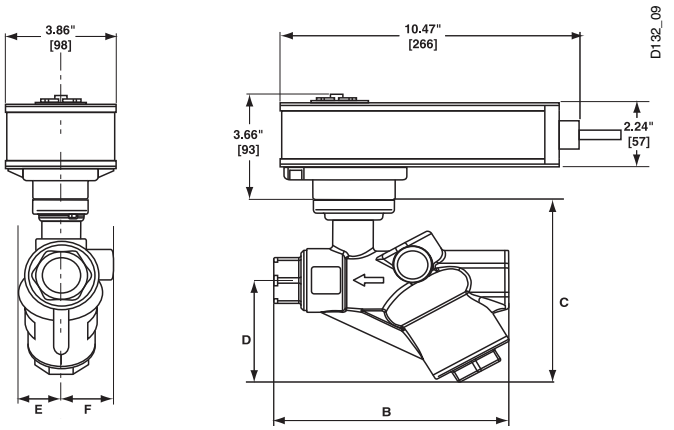

Valve Nominal Size In.	DN [mm]	A	B	C	D	E	F
		Dimensions (Inches [mm])					
1¼"	32	8.19 [208]	8.19 [208]	5.67 [144]	3.66 [93]	1.77 [45]	1.61 [41]
1½"	40	8.03 [204]	8.03 [204]	5.67 [144]	3.66 [93]	1.77 [45]	1.61 [41]
2"	50	8.50 [216]	8.50 [216]	5.91 [150]	3.66 [93]	1.77 [45]	1.61 [41]

2" NPT with flows to 40 GPM

Dimensions with PICCV P/T Ports

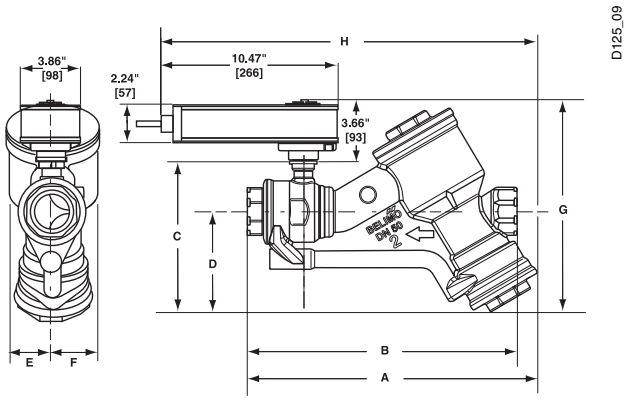

Valve Nominal Size In.	DN [mm]	A	B	C	D
		Dimensions (Inches [mm])			
2"	50	16.39 [416]	15.60 [396]	8.94 [227]	5.87 [149]

Valve Nominal Size In.	DN [mm]	E	F	G	H
		Dimensions (Inches [mm])			
2"	50	2.64 [67]	2.64 [67]	12.83 [326]	21.90 [556]

2" NPT with larger flows from 44 GPM to 100 GPM

M40019 - 06/10 - Subject to change. © Belimo Aircontrols (USA), Inc.

Wiring Diagrams

INSTALLATION NOTES

2 **CAUTION** *Equipment damage!*
Actuators may be connected in parallel if not mechanically mounted to the same shaft. Power consumption and input impedance must be observed.

3 Actuators may also be powered by 24 VDC.

4 IN4004 or IN4007 diode (IN4007 supplied, Belimo part number 40155).

5 Triac A and B can also be contact closures.

6 Control signal may be pulsed from either the Hot (Source) or Common (Sink) 24 VAC line.

7 Position feedback cannot be used with Triac sink controller. The actuators internal common reference is not compatible.

APPLICATION NOTES

- The ZG-R01 500 Ω resistor converts the 4 to 20 mA control signal to 2 to 10 VDC, up to 2 actuators may be connected in parallel.
- Meets cULus or UL and CSA requirements without the need of an electrical ground connection.

WARNING *Live Electrical Components!*
During installation, testing, servicing and troubleshooting of this product, it may be necessary to work with live electrical components. Have a qualified licensed electrician or other individual who has been properly trained in handling live electrical components perform these tasks. Failure to follow all electrical safety precautions when exposed to live electrical components could result in death or serious injury.

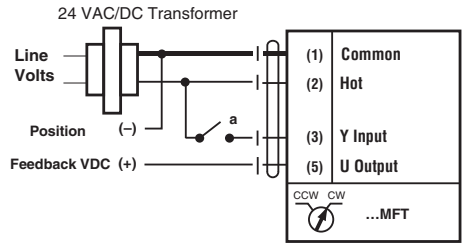

On/Off control

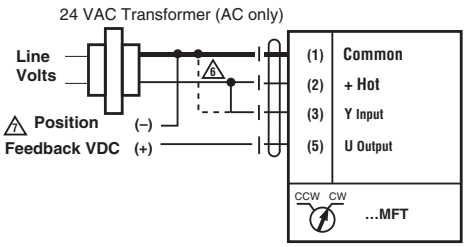

PWM, triac source and sink

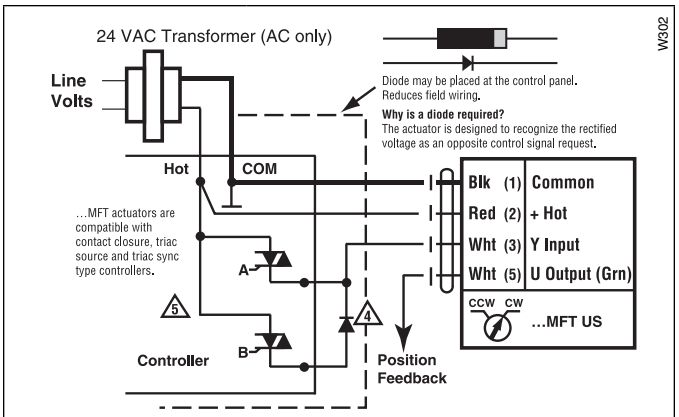

Floating Point control

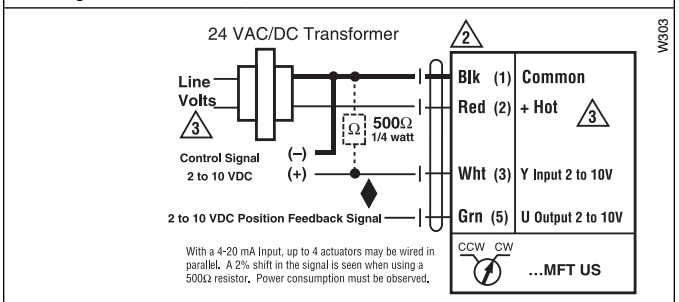

Proportional 2 to 10 or 4 to 20 mA control signal

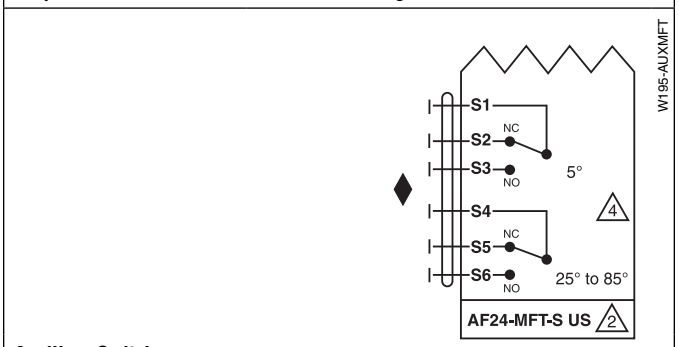

Auxiliary Switches

M40019 - 06/10 - Subject to change. © Belimo Aircontrols (USA), Inc.