Digital Lighting Management

Plug n' Go™ automatic configuration for quick installation and maximum energy savings

Push n' Learn™ for simple personalization and exclusive wireless tool for ladder-free configuration

Optional networking for scheduled control and remote system management

Plugs together using Cat 5e cables with RJ45 connectors eliminating wiring errors

Integrates plug load and lighting control

First suite of digital room controllers, occupancy sensors, switches, panels and more

PROJECT

LOCATION/TYPE

Product Overview

Description

Digital Lighting Management (DLM) is an intelligent, distributed control system that automatically maximizes lighting energy efficiency. DLM includes room controllers, occupancy sensors, switches, daylighting sensors, plug load controls, lighting control panels, interfaces and accessories that provide convenient, energy-saving control of dimmed and switched loads. DLM can be used for stand-alone control of individual building spaces, or for centralized control of a floor, a building, or an entire campus.

Operation

Digital Lighting Managment components operate on a free-topology DLM local network. Each DLM local network is managed by one or more room controllers that, upon startup, automatically configure system components for the most energy-efficient sequence of operation using Plug n' Go technology. Devices may be personalized using Push n' Learn pushbutton programming. DLM sensors and switches feature two-way infrared (IR) communication that enables personal control from handheld remotes. An optional handheld IR wireless configuration tool may be used to view and modify system parameters, and store occupancy sensor settings. Additionally, multiple local networks may be connected to a BACnet-compatible segment network for centralized monitoring and management (see Segment Network section).

Plug n' Go and Push n' Learn

Plug n' Go establishes default functionality based on the installed components. If a local network includes only a room controller and an occupancy sensor, it will default to auto-on/auto-off operation. If it includes a single relay room controller, an occupancy sensor and a switch, it will default to manual-on/auto-off operation. A dual relay room controller, an occupancy sensor and a switch will default to bi-level auto-on/auto-off operation; relay 1 turns on automatically while relay 2 defaults to manual-on (both automatically shut off). Push n' Learn mode allows any load to be selected and assigned to any sensor(s), switch(es) and switch button(s). It also allows load parameters such as operating mode (manual- or auto-on), blink warning and daylighting setpoints to be modified.

Energy Savings Beyond Code

Digital Lighting Management has been engineered to meet and exceed energy codes, facilitate sustainable development and provide an unprecedented return on investment for both new construction and retrofit projects. Features, such as bi-level control, daylight harvesting, plug load control and dimming are provided by a range of room controllers, sensors and switches that control virtually all lighting sources in a wide variety of applications. DLM simplifies designing for ASHRAE 90.1, IECC, EPAct, California Title 24 and LEED.

Features

- Sensors and switches include infrared (IR) transceiver for bi-directional communication
- On/off and dimming control options
- Handheld remotes for personal control
- Digital sensors feature easy-to-read LCD displays
- Includes self-calibrating daylighting sensors
- Components plug together in any configuration on free-topology Category 5e DLM local networks
- Boot loading capabilities for firmware upgrades
- All DLM products are RoHS compliant

WattStopper®
www.wattstopper.com
800.879.8585

Network Characteristics

WattStopper DLM Local Network Parameters

- Communication and power delivered via Cat 5e cables with RJ45 connectors
- 24VDC power provided by room controller(s)
- Room controllers provide cumulative current output; maximum network capacity 800mA
- Free topology permits both star and daisy-chain connection patterns
- Up to 1,000' of cable per DLM local network; 150' allowance per communicating device
- Supports Plug n' Go and Push n' Learn patent pending technologies

When only LMRC-100 Series and/or LMPL-101 Room Controllers are used:
- 150mA per room controller (maximum 4)
- Up to 24 communicating devices
- Up to 8 loads

When LMRC-2xx, 3xx Series and or LMPL-201 Room Controllers are used:
- Up to 250mA per room controller (output is limited if network is fully powered)
- Up to 48 communicating devices
- Up to 64 loads
- Up to 4 LMRC-100 Series and/or LMPL-101 Room Controllers

DLM Segment Network (MS/TP) Parameters

- RS485 network, BACnet MS/TP twisted pair, baud rate 9600, 19200, 38400 or 76800 selectable
- WattStopper LM-MSTP wire, or equivalent rated for BACnet MS/TP (RS485)
- Linear topology (daisy chain wiring); 4,000' maximum per segment
- Up to 127 DLM local networks, connected via LMBC-300 Network Bridge or LMRC-3xx Series Room Controller, or LILM panels per segment

Connecting

Two DLM local networks connected to optional DLM segment network

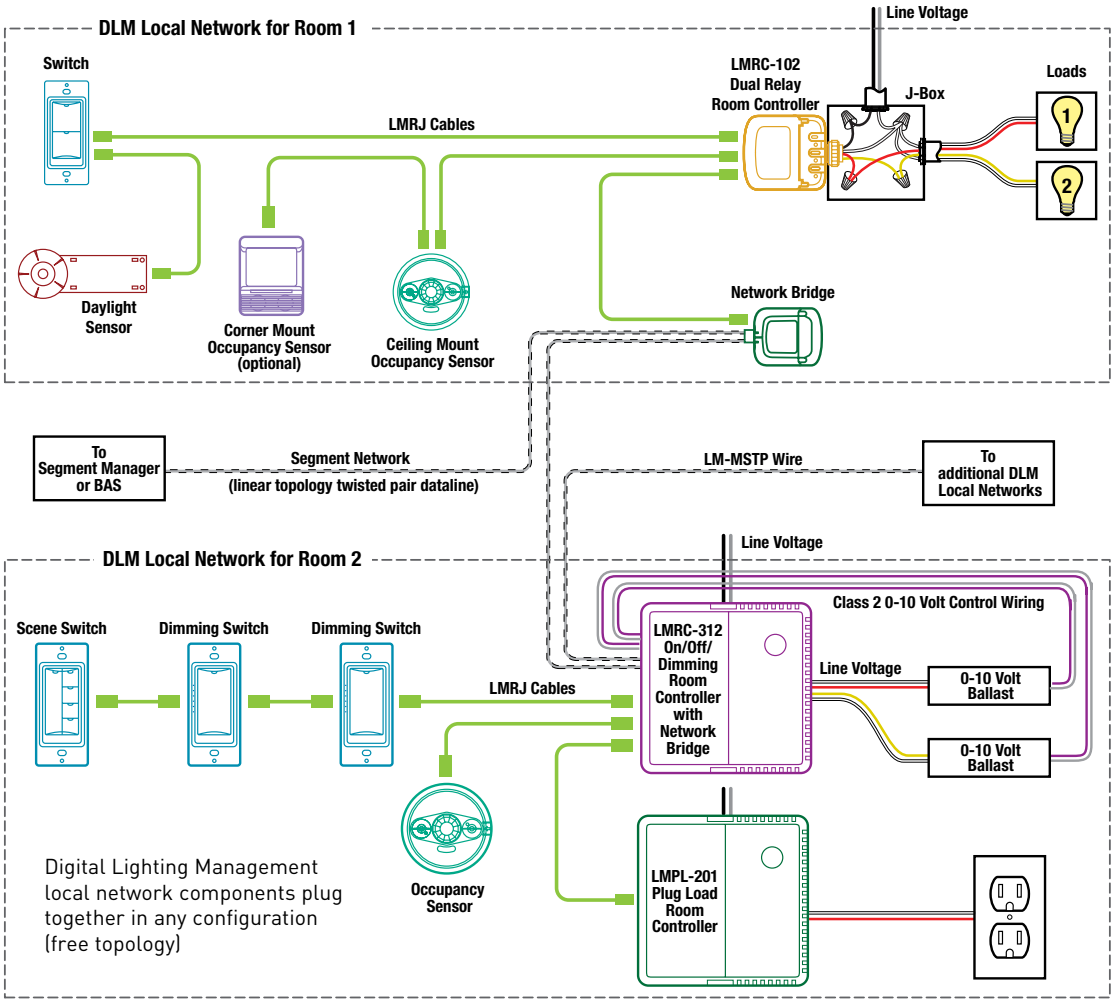

Each segment network can connect up to 127 local networks for centralized monitoring and control

Segment Network Control Options

Description

Digital Lighting Management is designed to scale from individual rooms to whole buildings. For building-wide monitoring and management, multiple DLM local networks may be connected to an industry standard open protocol network for control by a segment manager or building automation system (BAS). Networking also allows lighting control panels to be incorporated into a DLM system.

Operation

Because DLM architecture is designed from the bottom up, segment network operation is simple, and builds on the Plug n' Go and Push n' Learn functionality of each local network. Building operators can create normal and after hours lighting control schedules and conveniently monitor and fine tune DLM operation for even greater energy savings.They can also monitor power consumption in real time.

BACnet Compatibility

System integrators can quickly and easily incorporate new or existing DLM systems into BACnet MS/TP networks. DLM Network Bridge devices are standard MS/TP master devices, and the MS/TP MAC address and communication baud rate are automatically configured through arbitration with other devies on the network.

Applications

Network capability is an ideal solution when remote access to DLM local networks is desired. It can help energy managers take advantage of demand response opportunities and help cut operating costs. It is also recommended for control of lighting in areas best suited to schedule-based control, such as lobbies, corridors and exteriors.

Features

- Enables centralized control of individual DLM local networks
- Connects to LILM lighting control panels
- Allows scheduling of DLM devices
- Enables remote system management that includes real-time current monitoring
- Web browser user interface can be accessed via direct TCP/IP connetion, local LAN or via the Internet
- Easy integration with BAS through use of standard BACnet objects to represent DLM local network device settings and states

Network Wiring

DLM segment network with optional segment manager

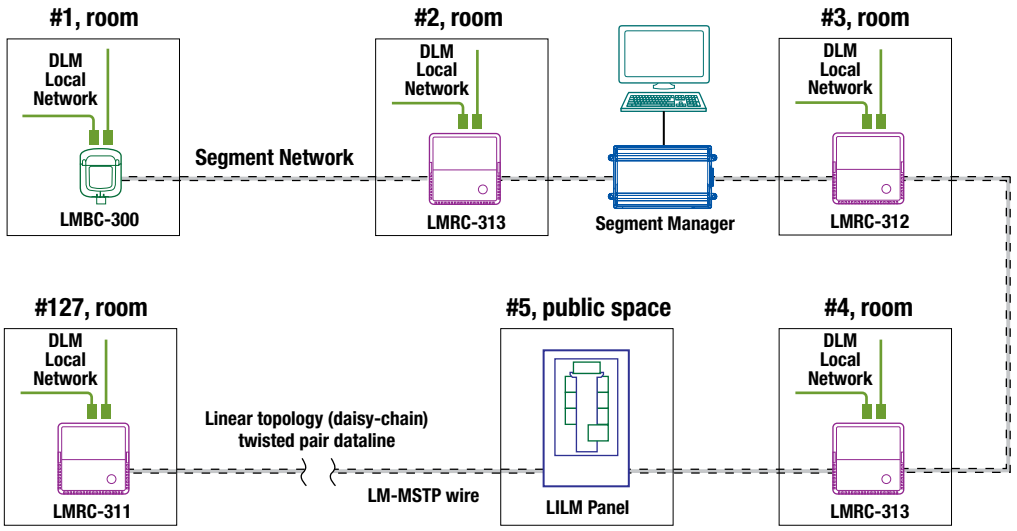

The segment manager may be located at any point along the segment network so long as the linear topology (daisy chain wiring) is maintained.

DLM Components

Room Controllers

LMRC-101 Digital On/Off Room Controller with 1 relay
LMRC-102 Digital On/Off Room Controller with 2 relays
LMRC-211 Digital On/Off/0-10 Volt Dimming Room Controller with 1 relay and 1 0-10 volt dimming output
LMRC-212 Digital On/Off/0-10 Volt Dimming Room Controller with 2 relays and 2 0-10 volt dimming outputs
LMRC-213 Digital On/Off/0-10 Volt Dimming Room Controller with 3 relays and 3 0-10 volt dimming outputs
LMRC-311 Digital On/Off/0-10 Volt Dimming Room Controller with Network bridge, 1 relay and 1 0-10 volt dimming output
LMRC-312 Digital On/Off/0-10 Volt Dimming Room Controller with Network bridge, 2 relay and 2 0-10 volt dimming output
LMRC-313 Digital On/Off/0-10 Volt Dimming Room Controller with Network bridge, 3 relay and 3 0-10 volt dimming output
LMPL-101 Digital Plug Load Room Controller
LMPL-201 Digital Plug Load Room Controller

Occupancy Sensors

LMPX-100 Digital PIR Corner Mount Occupancy Sensor
LMPC-100 Digital PIR Ceiling Mount Occupancy Sensor
LMUC-100 Digital Ultrasonic Ceiling Mount Occupany Sensor
LMDX-100 Digital Dual Technology Corner Mount Occupancy Sensor
LMDC-100 Digital Dual Technology Ceiling Mount Occupancy Sensor

Personal Controls

LMSW-101 Digital 1-Button Wall Switch
LMSW-102 Digital 2-Button Wall Switch
LMSW-103 Digital 3-Button Wall Switch
LMSW-104 Digital 4-Button Wall Switch
LMSW-108 Digital 8-Button Wall Switch
LMDM-101 Digital 1-Button Dimming Wall Switch
LMSW-105 Digital 5-Button Scene Switch
DLM Switch Button Kits and Switch Button Engraving
LMRH-102 Digital 2-Button IR Remote Control
LMRH-101 Digital Dimming IR Remote Control
LMRH-105 Digital Scene IR Remote Control

Daylighting Sensors

LMLS-400 Digital Single Zone On/Off and Dimming Closed Loop Photosensor
LMLS-500 Digital Multi-zone On/Off and Dimming Open Loop Photosensor

Configuration Tools

LMCT-100 Digital Wireless Configuration Tool
DLM Computer Interface Tools and Software

Network Components

LMBC-300 Network Bridge
LMSM Series Segment Manager

Lighting Control Panels

LILM Series Panels

Interfaces and Accessories

LMRJ Series Pre-Terminated Cables (available in 6", 3', 10', 15', 25', 50', and 100' lengths, in plenum and non-plenum rated versions) and Segment Network Wire
LMIR-100 Digital IR Ceiling Mount Receiver
LMRL-100 Isolated Relay Interface
LMIO-101 Digital Input/Output Interface
LMIO-301 Photocell Input Module